DESIGN OF FIRE-FIGHTING ROBOT

Report submitted in partial fulfillment of the requirements for the B. Tech. degree in Mechanical Engineering

By

Shubham Satishbhai Patel 18BME099

<u>Under the supervision</u>
<u>Of</u>

: Dr. Anirudh Kulkarni.

SCHOOL OF TECHNOLOGY
PANDIT DEENDAYAL ENERGY UNIVERSITY
GANDHINAGAR, GUJARAT, INDIA
May 2022

DESIGN OF FIRE-FIGHTING ROBOT

Report submitted in partial fulfillment of the requirements for the B. Tech. degree in Mechanical Engineering

By

Shubham Satishbhai Patel 18BME099

Under the supervision
Of
: Dr. Anirudh Kulkarni.

SCHOOL OF TECHNOLOGY
PANDIT DEENDAYAL ENERGY UNIVERSITY
GANDHINAGAR, GUJARAT, INDIA
May 2022

CERTIFICATE

This is to certify that the report on “Title Design of Fire-Fighting Robot” Submitted by the students, as a requirement for the degree in Bachelor of Technology (B. Tech) in Mechanical Engineering, under my guidance and supervision for the session 2021-2022.

Name of the student	**Roll No.**	**Signature**
Shubham Satishbhai Patel	18BME099	

Date: 23/05/2022

Place: PDEU, Gandhinagar.

Dr. Anirudh Kulkarni.

Acknowledgement

This CP was my first-time experience in the field of Fire -Fighting. I would like to express my special thanks and gratitude to **AAAG India** for giving me the freedom and exposure to work on topic "Design of Firefighting Robot" and providing me a very helpful and supportive environment throughout the duration of the CP where I was able to bring out the best in me. Project required to think and move forward with own idea and thought process without any limitations at the same time taking into consideration all the main requirement of the robot. I would like to thank my Industry mentor **Mr. Hemal Shah** the Chief Technical Officer at AAAG India who ensured that I was having a good experience and learning throughout the project and believed in me to have the ability to handle and complete such project. I would also like to thank **Dr. Anirudh Kulkarni** who was there to help me out during the project and was always there to help me through any difficulties that I encountered during the project and provided support for completing the project, he ensured that I was doing the work during the week

I would also like to thank **Pandit Deendayal Energy University** for keeping CP in the course curriculum to give students more of a hands-on experience in completing a project on industry premises, helping us to experience how a project is actually completed and how problems are solved in a industry.

1. Shubham Satishbhai Patel 18BME099

List of Tables

Table 3. 1 Loading Conditions and Result Table for FEA Simulation of Link. 23
Table 3. 2 Loading Conditions and Result Table for FEA Simulation of Base Plate. 24
Table 3. 3 Loading Conditions and Result Table for FEA Simulation of New Link. 25
Table 3. 4 Loading Conditions and Result Table for FEA Simulation of Link. 26
Table 3. 5 Loading Conditions and Result Table for FEA Simulation of Battery Casing. 31
Table 3. 6 Specifications and Details of Components. 32

List of Figures

Figure 2. 1 Shifting from Textile to Fire Fighting Equipment's. [12] 2
Figure 2. 2 AAAG India, Santej. (2021). [12]..... 3
Figure 2. 3 Structure and Body of Fire-Fighting Robot. 4
Figure 2. 4 Working of Robot and Pressurization System. 4
Figure 2. 5- Main Components of the Robot..... 6
Figure 2. 6- General Construction of Robot. 7
Figure 2. 7- Body of Robot..... 8
Figure 2. 8 – Section View Showing Inlet and Coupling (old and new design) 8

Figure 3. 1 – Support Structure with Uniform Load Distribution. 11
Figure 3. 2 Different Scenarios for Calculation.[3]..... 12
Figure 3. 3 Result Showing Power and Torque Requirements..... 14
Figure 3. 4 Recoil Force Calculations for Robot.[3] 15
Figure 3. 5 Different types of Dampers and suspensions.[11] 16
Figure 3. 6 Suspension Geometry and Angle with Links..... 17
Figure 3. 7 Suspension Design with Eye-to-Eye distance 130mm and Connector. 18
Figure 3. 8 Different Designs Consideration for Frame Structure. 19
Figure 3. 9 Design of Base Plate With 8mm Thickness..... 20
Figure 3. 10 Dimensions of Track, Shape and The Sizes of Support Wheels..... 20
Figure 3. 11 Arrangement of Links with Frame..... 20
Figure 3. 12 Overall Dimensions and Preliminary Design of The Robot 21
Figure 3. 13 Track Size Identification Parameters.[10] 21
Figure 3. 14 Types of Pitch.[10]..... 21
Figure 3. 15 Types of Track System. [10]..... 22
Figure 3. 16 Static Structural Analysis of 8mm Link..... 23
Figure 3. 17 Static Structural Analysis of Base Plate..... 24
Figure 3. 18 Static Structural Analysis of New Link 25
Figure 3. 19 Loading Condition and Fixtures for Base Plate with Help of Split Face..... 26
Figure 3. 20 Results of Static Structural Analysis of New Base Plate 26
Figure 3. 21 Manufacturing Stage of A Similar Robot 27
Figure 3. 22 Learnings from Similar Robot Indicating Different Monitor Design. 27
Figure 3. 23 Comparison of New And Old Body..... 28
Figure 3. 24 Comparison of New and Old Design 29

Figure 3. 25 Design and Arrangement of Motor Casing in Assembly. 29
Figure 3. 26 Battery Casing Design with Provision of Mounting the Water Monitor. 30
Figure 3. 27 Static Structural Analysis of Battery Casing. 30
Figure 3. 28 Track Tensioner Example (a)[11] and Incorporation in New Design(b). 31
Figure 3. 29 Final Updated Design of Robot. 32

Abbreviations Used

Abbreviation	Full Form
GVW	Gross Vehicle Weight
R_w	Radius of sprocket wheel
Q	Flow Rate
V_{Inlet}	Inlet Velocity
V_{Outlet}	Outlet velocity
$C.S.A_{Inlet}$	Inlet Cross sectional Area
$C.S.A_{Outlet}$	Outlet Cross sectional Area
w	Weight on each link
F_x	Back Pressure Force along X axis
Fy	Back Pressure Force along Y axis
F_z	Back Pressure Force along Z axis
k	Spring Stiffness
F.O.S	Factor of Safety

Table of Content

Chapter-1: Introduction 1

Chapter -2: Report on Comprehensive Project. 2

2.1 History of the Industry. 2

2.2 Introduction to the Selected Product. 4

2.3 Applications and Significance of the Product. 5

2.4 Technical Specifications of the Product. 5

2.5 Description of important components of product. 6

2.7 Technological and Business Challenges. 9

Chapter-3 Approach towards problem statement/Outcomes/ Learnings. 10

3.1 Approach 10

3.2 Calculations 12

3.2.1 Power requirement, Torque requirement. 12

3.2.2 Recoil Force Calculations 15

3.2.3 Battery Calculations 16

3.2.4 Suspension Selection and Calculations 16

3.3 Design and Finite Element Analysis 19

3.3.1 Static structural analysis 22

3.3.1 Some findings and Changes in Design. 27

3.3.2 Changes in Design. 28

3.4 Challenges. 33

3.5 Learnings and Outcomes. 34

4 References 35

4.1 Research papers & Journal Articles. 35

4.2 Books 35

4.3 Websites & Online Articles. 36

Chapter-1: Introduction

Fire incident is a disaster that can potentially cause the loss of life, property damage and permanent disability to the affected victim. They can also suffer from prolonged psychological and trauma. Fire fighters are primarily tasked to handle fire incidents, but they are often exposed to higher risks when extinguishing fire, especially in hazardous environments such as in nuclear power plant, petroleum refineries and gas tanks. They are also faced with other difficulties, particularly if fire occurs in narrow and restricted places, as it is necessary to explore the ruins of buildings and obstacles to extinguish the fire and save the victim, moreover during the fire outrage in such places like oil refinery the temperature and thermal radiations are so high that fire fighters find it difficult to sustain long time in such environment during such incidents a firefighting robot can continuously work for hours without any difficulty, also fire-fighting robot can carry water at high pressure and more flowrate as it is capable to resist the back thrust that water flow exerts. AAAG India being a prominent player in the fire protection field for over seven decades now knowing the high risks in fire extinguishment operations aims those technological innovations can be utilized to assist firefighting.

The main task during the Project at AAAG India (Shah Bhogilal Jethalal and Bros.) was to design and develop an autonomous remote controlled firefighting robot which is having requirements as discussed - controller rang of 150m, should be a battery powered robot, robot shall have tracked powertrain system with sprocket wheel with independent suspension at all supporting wheels for better performance, firm and structurally robust chasis frame, robot shall be able to move in different terrains like grass, potholes, continuous hump, paved or unpaved road, etc. It should be able to climb stairs and cross ditches. Robot should be able to climb to 30-degree slope. The minimum speed of robot should be 2.5km/h.it should be capable of carrying load of 200kg and toe weight of 2000kg. Robot was also required to have capability of turning 360 degrees with minimum possible turning radius.

During this 4 month of time period, I was able to make a preliminary design of the robot satisfying all the basic and important requirements as given to me by the company and as stated above. For few weeks I also undergone training at the workshop, manufacturing and testing facility at AAAG India which helped me in understanding manufacturing processes like sand casting, vacuum casting, machining and testing of various firefighting equipment’s like fire hose, hydrants, Foam equipment, monitors, trailer and pumps. I was able to closely monitor foundry facility at the company where understood the process of making of pattern, cope, drag, risers, runners, sprue, melting of metal in induction furnace, recycling of used sand and also learned how the waste of risers and runners were melted and reused in manufacturing for cutting down cost. I also worked with purchase department of the company to procure various components required to be purchased.

Chapter -2: Report on Comprehensive Project.

2.1 History of the Industry.

In 1928, the late Shri Bhogilal Jethalal Shah relocated from the small town of Umreth in central Gujarat to the industrial city of Ahmedabad in search of better business prospects. After working at the traditional family business of glass framing for a few years, he set up Shah Bhogilal Jethalal Iron & Brass Factory at Ahmedabad in 1933. The intent was to manufacture brass valves to meet the demand of the burgeoning textile industry, which was then at its peak in Ahmedabad. Over the next decade, however, the textile industry began to decline, and Bhogilal was quick to foresee its negative impact on his business. To counter this problem, he began to manufacture products for different applications and industries, which included supplies to the Defence sector (including Hose couplings to the British army during the Second World War). He zeroed in on Bronze Landing valves, Hose couplings and Nozzles as products with good market potential, and with this launched Shah Bhogilal Jethalal & Bros's journey on the path of fire protection.

For next 3 decades thereafter, Shah Bhogilal Jethalal & Bros continued to manufacture these products, gaining recognition as a quality producer of fire-fighting equipment. On client demand, Bhogilal and successive generations of his family continued to add various fire-fighting equipments to their product range, and today, the company produces a wide range of water and foam-based fire-fighting equipment for fixed, mobile and vehicle-based fire-fighting application.

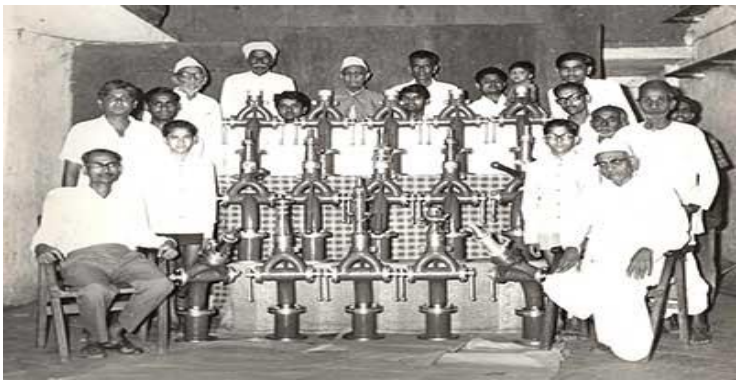

Figure 2. 1 Shifting from Textile to Fire Fighting Equipment's. [12]

Today, the third and fourth generations of Shri Bhogilal family enthusiastically pursue his vision of creating a world class manufacturing organization to meet the world's fire protection needs. For Bhogilal, quality and reliability of his products were paramount, and after 8 decades, the company's values remain unchanged, as they continue to manufacture fire-fighting equipment whose performance can be relied upon even in the most trying conditions.

Today, AAAG boasts of a modern, 50,000 sq. feet manufacturing facility, with in-house foundry, machining, and assembly and testing facilities. The complete range of its products are now manufactured in-house, with state-of-the-art machinery, equipment and fully trained staff. At the same time, the age-old traditions of quality and commitment that Bhogilal inculcated in his organization, still remain strongly ingrained in all their activities.

Figure 2. 2 AAAG India, Santej. (2021). [12]

2.2 Introduction to the Selected Product.

The task assigned to me was design of a fire-fighting robot capable of extinguishing fire in harsh conditions and in cases where fire-fighters are not able to control the fire due to limited amount of water flow and water pressure they can handle. The robot was required to be all terrain type which can run on various terrains without any difficulty. The approximate weight of robot was estimated around 400 kg with tow capacity of 2 Ton. In cases of fire in refinery and large factories Thermal radiations are so high that fire fighters find it difficult to sustain long time in such environment during such incidents a firefighting robot can continuously work for hours without any difficulty, the demand and market of such robots is very large as there are only few competitors in market

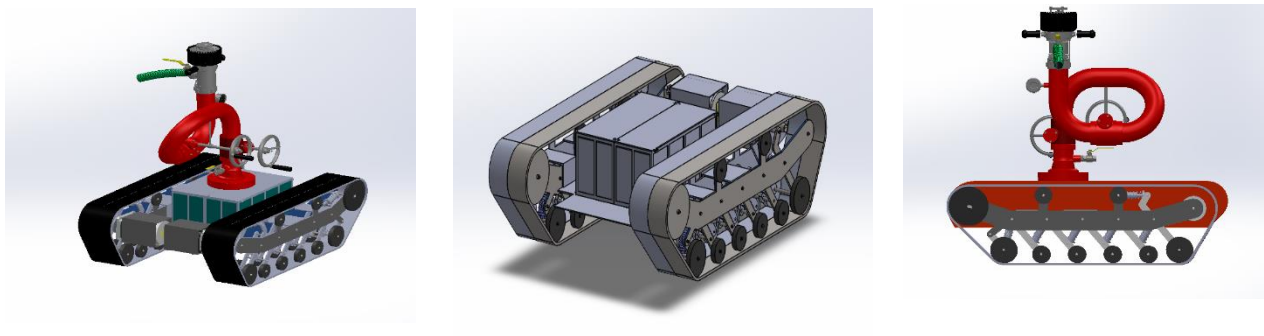

Figure 2. 3 Structure and Body of Fire-Fighting Robot.

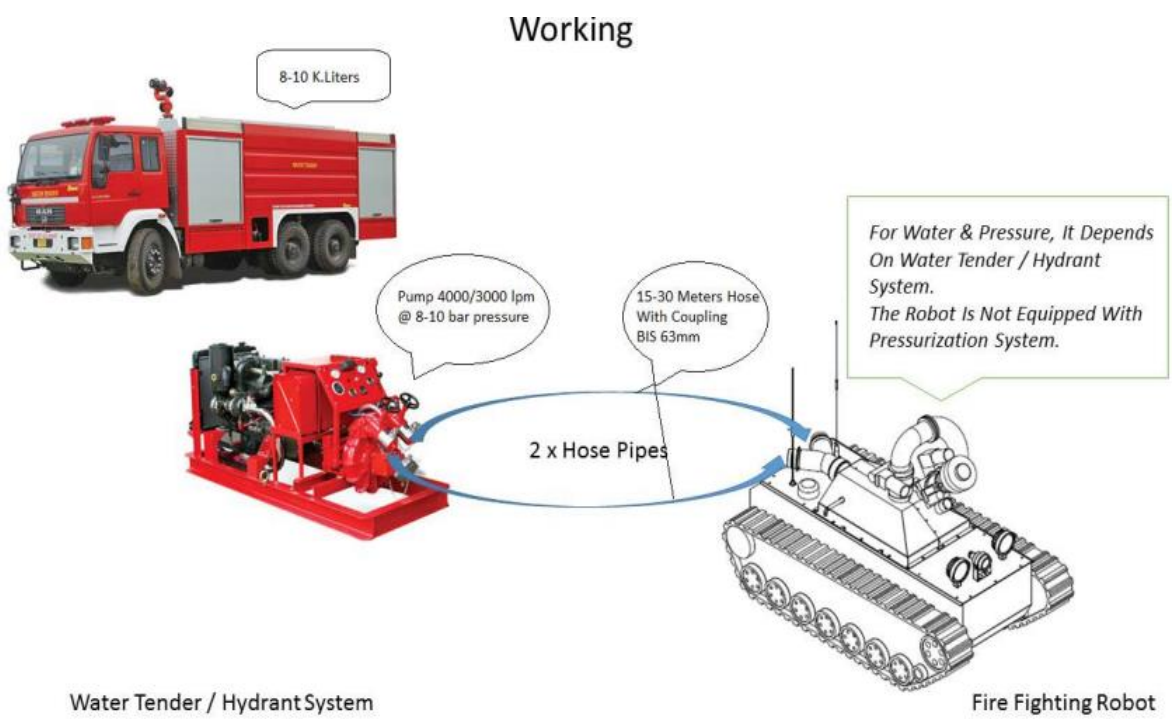

Figure 2. 4 Working of Robot and Pressurization System.

Working of the robot: In fire truck we have a diesel operated mechanical pump system which can convert the stored water in truck to a high pressure and high flow rate flowing water, which is then connected to a hose pipe having other end coupled with robot these pipes are normally 60 m long and are very durable and strong to hold very high pressures around 15-20 bar.

2.3 Applications and Significance of the Product.

Application of this robot is during the fire emergency as it helps in firefighting and controlling fires at various locations .It helps in saving life and preventing damage to fire-fighters in places which are very dangerous and difficult to reach out carrying heavy hose pipes and in places which have chances of building collapse, explosion, chemical gas leakage this robot helps in fire-fighting thereby making fire-fighting possible in such places and control the damage to life and property. The range provided by such robot is more compared to the range reached by fire-fighters so it can reach high raised buildings and fire at distance easily. The flow rate and pressure with which robot can throw water is very large compared to flow by a single fire-fighter which helps in controlling fire in less time without reaching for more damage. The throw of the water to reach the desired target can be easily controlled by the robot with precision by adjusting the pitch and yaw angles of remote-controlled fire monitor. The infrared and thermal cameras installed on robot helps in getting the pictures and scene inside of a facility in which fire is there which can help firefighters to make proper strategy and action for controlling it. The robot is designed for continuous operation of 3-4 hours and as it is not a human it can do its work more efficiently compared to fire-fighters. The mist system provided on the robot will help in keeping the robot cool even in very harsh conditions so in such cases robot can work even very close to fire which is not possible for fire-fighters.

2.4 Technical Specifications of the Product.

- Fire-fighting robot shall consist of Water monitor, drive system, remote controller with screen display, wireless transmitter etc.
- The dimensions of the Robot shall not be more than 1600 X1200X1300mm without antenna.
- The Overall weight of the complete Robot shall not exceed 500 kg. It should also have certifications for design compliance and material manufacturer compliance.
- The Robot shall be splash waterproof including electrical system - minimum IP 54.
- The drive system of the robot shall be electrical drive provided by rechargeable batteries. Battery has to be only VRLASMF Battery.
- The robot shall be able to perform in the temperature range from - 10◦ C to + 60◦ C and relative humidity of 90%.
- It should be able to tow a vehicle of weight of not less than 2.5-ton GVW.

- All wheel suspension system shall be provided for all the wheels which will assist in crossing high barriers while maintaining a low centre of gravity.
- The robot shall drag the full range of long fire hoses and the robot chassis shall have good dynamic performance.
- The robot shall be able to climb the stairs and cross ditches.
- The robot shall be provided with water proof video camera and Thermal imaging camera for surveillance and fire fighting in remote places.
- The ground clearance shall be 150 mm and grade ability of 30 degrees slope.
- 2X63 mm male instantaneous BIS water inlet couplings will be provided at the rear of the Robot to connect fire hoses.
- A Water monitor capable of discharging min. 1800 LPM @ 10 bar shall be mounted on the Robot.
- The monitor should be able to discharge water to a distance of not less than 50 m at full pressure. The material of monitor should be Stainless Steel/ Bronze only and nozzle shall be made of anodized aluminium.
- The nozzle should have the provision of changing the discharge pattern between Jet and Fog.
- There should be a long-range LED lights mounted on the robot chassis which can be turned on in case if lights required for some case but it should be positioned in such way that camera view is not disturbed by doing so.

2.5 Description of important components of product.

- **Motor and planetary gearbox-** The robot is powered by two 1800W BLDC motors having 3000rpm and double reduction planetary gear box to reduce the rpm of motor when it reaches sprocket.

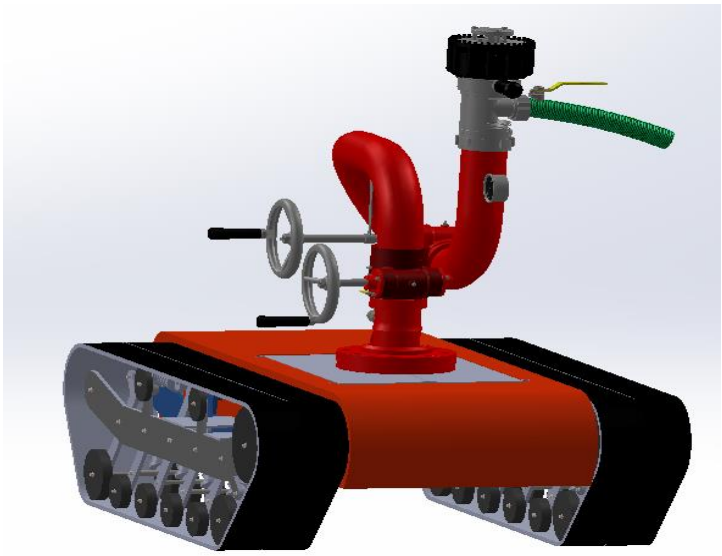

Figure 2. 5- Main Components of the Robot

- **Frame structure and links**- Frame structure and links are the base on which all the components of robot are mounted, also frame and links along with suspension transfers the weight equally to ground and absorb shocks during movement.
- **Track and sprocket system**-track sprocket system is the powertrain system which helps the robot to move in all terrain conditions. Kevlar fiber integrated track was chosen taking in consideration the high temperature and rough terrain during robot working.
- **Idler, Support wheels and track tensioner system**- idler and track tensioner system helps in keeping the track in tension preventing the slipping of track from its position and ensuring proper mating of sprocket and track required for efficient power transfer.
- **Suspension consideration**- suspension systems help in making the system stable during moving and overcoming obstacles, optimum ride rate and calculations helps in maintaining ground clearance wile absorbing shocks.

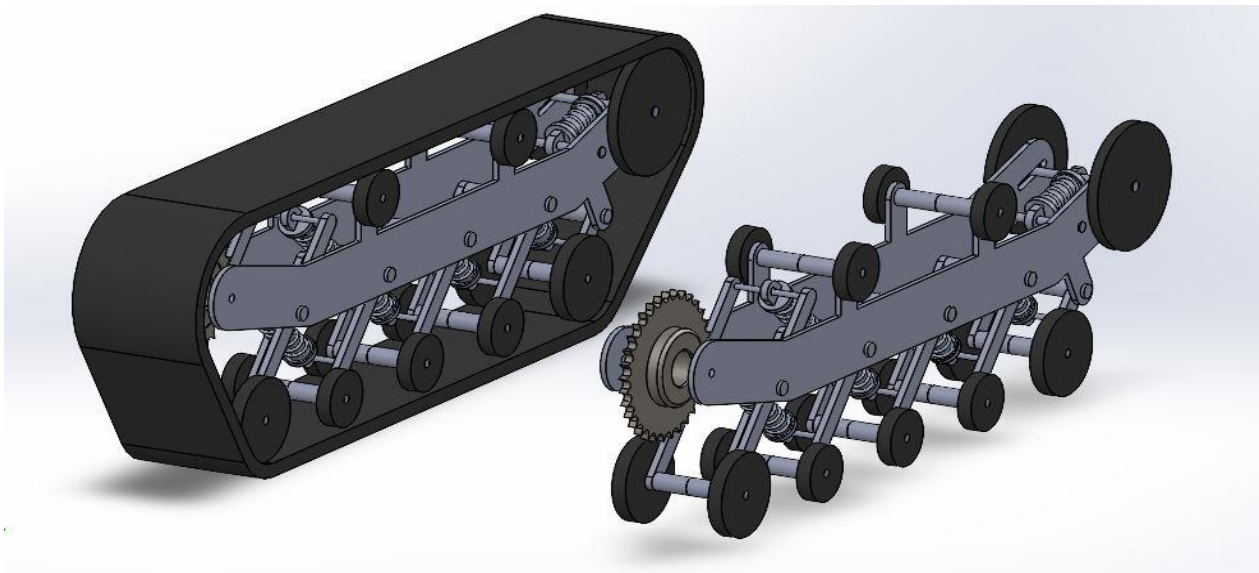

Figure 2. 6- General Construction of Robot.

- **Sprinkler system-** sprinkler system is designed to keep the robot cool and make it capable for continuously work in high temperature environment without any threat to battery, controller and rubber track.

- **Body**-body helps in protecting the battery, controller, motor and other components from external damage and external environmental conditions.it also guards the components from debris and damage.

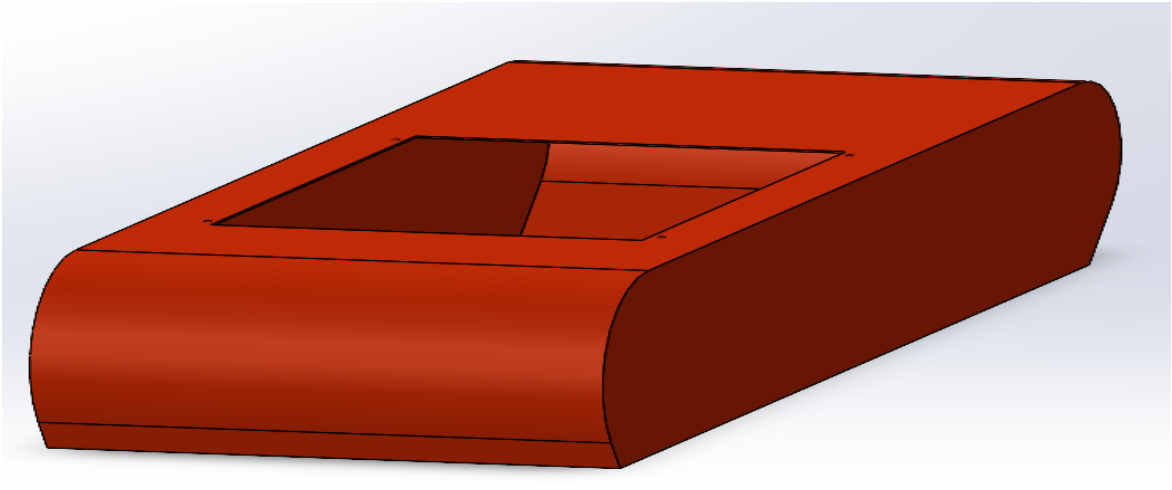

Figure 2. 7- Body of Robot

- **Battery VRLA-** two maintenance free sealed rechargeable battery of 100 Ah are installed in robot which helps it in control and actuation of various motors and controllers with help of remote controller
- **Fire monitor**- remote controlled fire monitor with adjustable pitch and yaw angles helps in directing the water flow to desired height and position. Flow can be changed from jet to fog mode using the controller depending upon the type of fire conditions at the site.

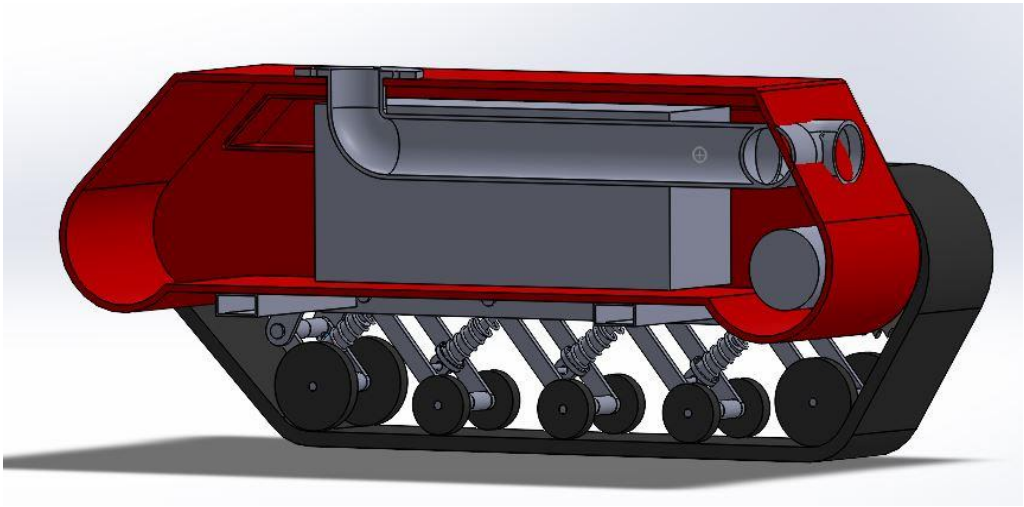

Figure 2. 8 – Section View Showing Inlet and Coupling (old and new design)

- **Controller and antenna -** controller has the range of 150m helps in controlling robot motion and transmitting and receiving video feed of infrared and thermal cameras.
- **Infrared and Thermal camera-** These cameras are eyes of robot helps the fire-fighters to understand the conditions around robot and helps them to make efficient strategies to control the fire.
- **Water inlet coupling system-** the male coupling system helps in connecting tow hose pipes with the robot and coupling them helps in providing more flow rate at outlet of fire monitor.

2.7 Technological and Business Challenges.

Being the new product with only few developers and product having special purpose use it was a technically challenging job designing this robot I faced many challenges , starting from determining the power requirements, estimating weight and dimensions, understanding the various types of tracked vehicle mechanisms to deciding the frame structure and link positions, there was no proper research papers available on internet containing the standard mathematical derivations or explanations for design. Also, many of the products like battery with high voltage of 24 V or 48 V being not available in India to Unviability of any custom manufactures of tracks in India it was very difficult to finalize the size and shape of the robot, the challenge was also there in setting up the track tensioner system as no data was available about the stiffness of springs or dampers used in it.

Understanding the business challenges of this robot the price in Indian market of such robot ranges between 40 lacks to 1crore as being priced at such high price there is limited demand of product and only some old and dominant industries willing to invest large amount of money can get into such projects. Furthermore, the requirements of such robots are most of the time are published through tenders on public notice, so design need to be competitive at par to the requirements and costing and manufacturing should be dealt very carefully.Currently the market demand of such robots is seeing a great rise as governments are rising the requirements of such robots in their respective states firefighting department, also big chemical and Petro-chemical industries are ready to by such robots at price band of 50-100 Lacks understanding the effectiveness of damage control of such robots in case of large fire outrage in their factory premises. In future with more competition and demand and chances of decrease in cost and with more customizations there is huge market of such robots in almost every industrial domain with high chances of damage in case of fire including industries like Gas processing, wood related industry, petrochemical processing and storage industries, etc.

Chapter-3 Approach towards problem statement/Outcomes/ Learnings.

3.1 Approach

Initially during the first week I visited the company and understood the newly introduced domain of fire-fighting equipment, and the working and manufacturing processes of the same. During this time, I learned how raw materials were processed to final products of firefighting using the help of CNC, VMC, grinding, lathe, milling, special purpose lathe, welding machines, sand blasting, and casting.

After understanding the basic role of different firefighting equipments and shortcomings. I started to browse on internet trying to understand the process of fire fighting with help of robot and finalize the design process for the robot. The most important thing required was to understand the integration of robot which needed the battery, motor, monitor connection, gearbox system and sprocket size to be fixed. I started to search the research papers to understand the power requirement calculations for the robot, initially I tried to do the power calculations manually with hand but every time when I needed to change any parameter or angle, I needed to redo whole calculations so I made an EES file with all parameters, formulas and results. Some concepts like estimating required traction and torque for the robot and fixing the speed and understanding the worst-case scenario, understanding the interaction of tracked system with ground for the calculations were the tasks that I spent time working on initially.

Having sorted out the calculations and getting the approximate specifications of battery, gearbox, and final motor with appropriate Torque, Power and RPM requirements. It helped out in initially estimating the size of robot in terms of Height, Width, and Length of the Robot. Sprocket size and track system along with the speed were some other variables which I worked upon. I researched about the track tension system and try to understand and conceptualize how it will be incorporated in our robot. Also, during this time, I visited various online market places to check for the availability of required components in India and across the world according to our needs.

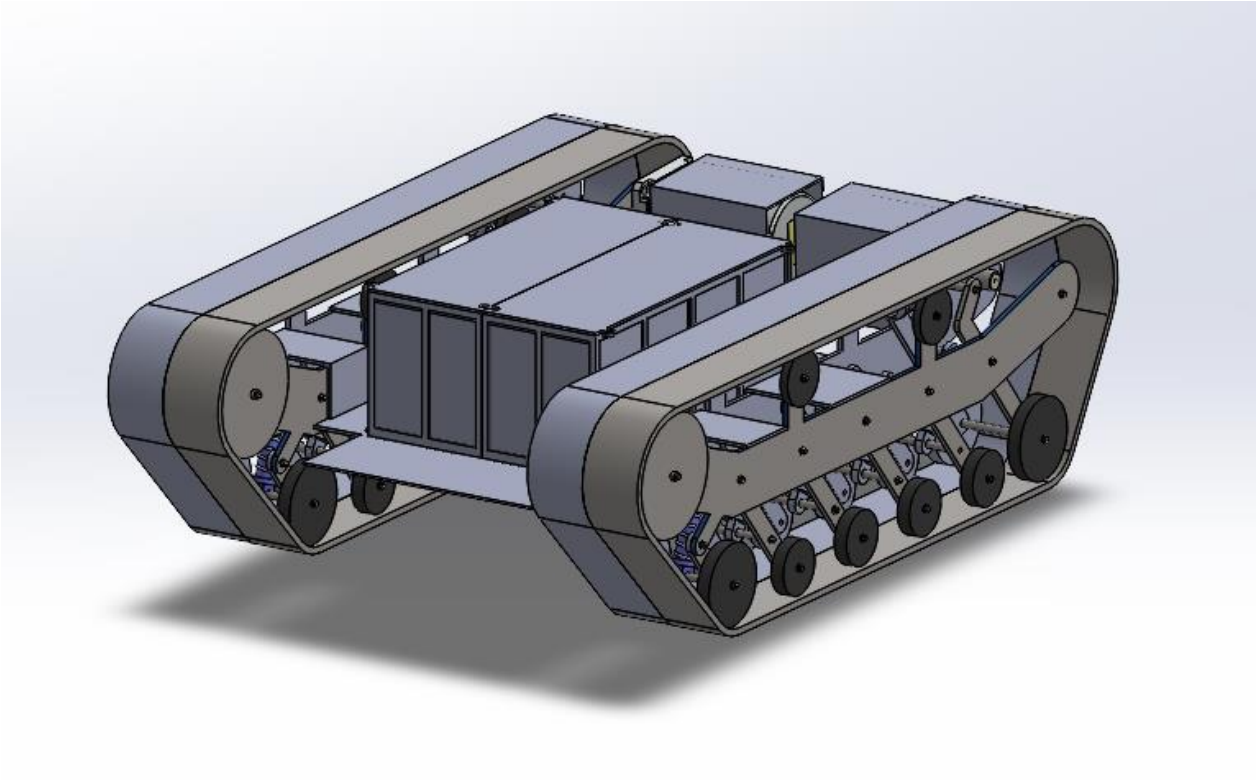

Figure 3. 1 – Support Structure with Uniform Load Distribution.

In next phase starting with trial and error I tried to fix the geometry of the frame structure along with the links and supporting wheels. In this process there were various at least 6 designs from which one was chosen on the basis of easy assembly and simple construction.

The connection between the two sides of frames was then designed so that load can be equally distributed on all the four support plates. Suspension design and consideration was one of the major areas which was very difficult and challenging. In next phase I started to work on CAD model based on the notes and design parameters I worked on through these days and also carried out the FEA analysis for the various components where I fixed the thickness of the components according to the stresses acting on the components. I also visited vendors in Jaipur, Bharuch and Ahmedabad for development of controller and the Track. I worked also with the electrical department in searching and finding the company/person who has knowledge of PLC programming making them understand the main requirements for the proposed controller and display along with antenna, the robot consisted of total 4 motors two motors at left and right for track movements and other two motors for control of yaw and pitch angles of fire monitor and two cameras. All this was needed to be controlled by a single controller also visuals from cameras were required to be transmitted to display by antenna. During the forward and reverse movement, the two 1500 W BLDC motors were required to move synchronously at same speed and along same directions as per the required motion and during the turning both motors were required to turn in opposite directions to each other in order to achieve turning motion. After that I was working on proper mounting of the high torque motor and heavy monitor. Also, I figured out how the tensioner system will be installed in

the robot, along with this I also tried to understand the exact back-thrust acting on the monitor mounting on robot due to the water leaving with high velocity from the nozzle.

3.2 Calculations

3.2.1 Power requirement, Torque requirement.

The main calculations focus on the power requirement, battery requirement, reduction ratio and torque required by the robot for the operation. Which needed some assumptions on weight, friction factor, sprocket radius which is shown below in detail. For the worst-case scenario, we have assumed that robot is moving up the slope having inclination of 30 Degrees.

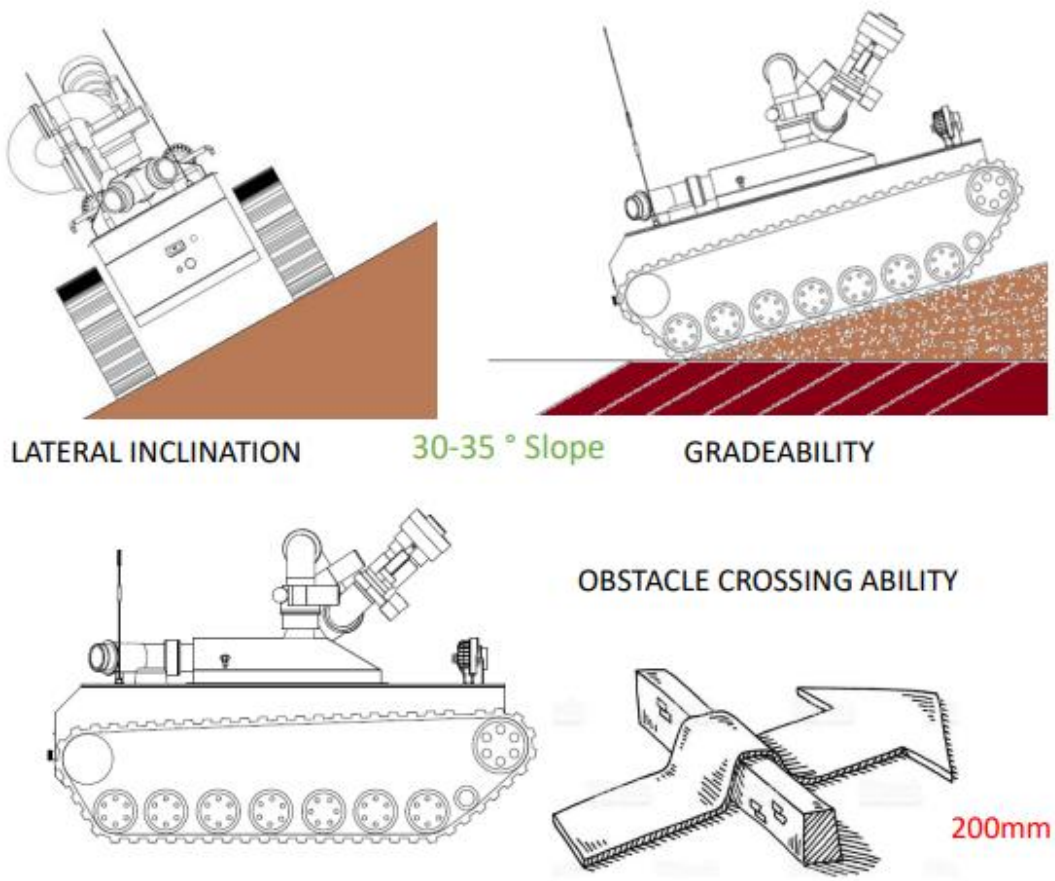

Figure 3. 2 Different Scenarios for Calculation.[3]

- Gross weight of vehicle is the overall weight of the vehicle.

$$GVW = 300$$

- Consider two pipes of 60 m having diameter equal to 63 cm containing water which are to be carried by robot during the operation so tow weight can be calculated as.

$$Tow_Weight = 2 * (pi/4 * 0.063\text{^}2 * 60 * 1000)$$

- Sprocket radius is the radius which the sprocket attached to track will have

$$Sprocket_Radius = 0.15$$

- Top speed and Tow speed of vehicle are as below.

$$Top_{Speed} = 3 * \frac{5}{18} \text{ m/s}$$

$$Top_Tow_Speed = 3 * 5/18 \text{ m/s}$$

- Maximum slope which robot can climb is one also one of the parameters which need to calculate the power requirements in our case we have set it to 30 degrees.

$$Maximum_Inclination_Angle = 30$$

- Angle at which the tow hose pipes are attached to the robot is the pipe angle which in our case is assumed to be 45 degrees for calculations.

$$Pipe_Angle = 45$$

- Acceleration time is the time in seconds which vehicle is able to reach its to speed

$$Acc_Time = 10$$

$$Tow_Acc_Time = 10$$

- Coefficient of friction are to be assumed from research papers and other data available from references. One is the coefficient of friction between tyre and ground other is the friction coefficient for pipe and ground.

$$Coeff_of_Friction = 0.7$$

$$Coeff_of_Friction1 = 0.4$$

- When the robot is moving up the slope there will be friction force acting on it, we require minimum amount of force same as this frictional force to get the robot moving and this force is termed as self-sliding resistance.

$$Self_Sliding_Resistance = (((GVW * cos(Maximum_Inclination_Angle * 9.81 * Coeff_of_Friction)) + (Tow_Weight * sin(Pipe_Angle) * 9.81 * Coeff_of_Friction)))$$

- When the robot is moving up the slope there will be gravitational force acting on it we require minimum amount of force same as this gravitational force to get the robot moving and this force is termed as grade resistance.

$$Grade_Resistance = ((GVW * sin(Maximum_Inclination_Angle) * 9.81) + (Coeff_of_Friction1 * Coeff_of_Friction * Tow_Weight * cos(Pipe_Angle) * 9.81))$$

- Force required to move the robot with required speed in given time is the acceleration force.

$$Acc_Force = (\text{Tow_Weight} + \text{GVW}) * \text{Top_Speed} / \text{Acc_Time}$$

- Total force required on each wheel by one motor is given by

$$TFE = (Acc_Force + Grade_Resistance + Self_Sliding_Resistance) / 2$$

- Torque required on each wheel to move the robot considering R_w as radius of sprocket wheel

$$Torque_wheel = TFE * R_w$$

- Power rating for each motor to run at top speed will be

$$Power_{Rating} = TFE * Top_Speed$$

- RPM of wheel can be calculated using the angular velocity as below.

$$RPM_wheel = Top_Speed / R_w * 60 / (2 * pi)$$

- The value of RPM and Rated torque for the motor based on values of sprocket are calculated as below

$$Reduction = (RPM_wheel / RPM_rated)\text{^}(-1)$$
$$Torque_rated = Torque_wheel / Reduction$$

Result from EES.

Unit Settings: [kJ]/[C]/[kPa]/[kg]/[degrees]

Acc_{Force} = 56.17	Acc_{Time} = 10	$Angular_{Velocity}$ = 10.42	$C.S.A_{inlet}$ = 0.006234
$C.S.A_{outlet}$ = 0.0001746	$Coeff_{of,Friction}$ = 0.7	$Coeff_{of,Friction1}$ = 0.4	$Grade_{Resistance}$ = 2198
GVW = 300	$Maximum_{Inclination,Angle}$ = 30	$Nozzle_{Angle}$ = 60	$Pipe_{Angle}$ = 45
$Power_{Rating}$ = 1584	Q = 0.004	Reduction = 30.16	RPM_{rated} = 3000
RPM_{wheel} = 99.47	R_w = 0.08	$Self_{Sliding,Resistance}$ = 1547	$Sprocket_{Radius}$ = 0.15
Top_{Speed} = 0.8333	$Top_{Tow,Speed}$ = 0.8333	$Torque_{rated}$ = 5.041	$Torque_{wheel}$ = 152
$Tow_{Acc,Time}$ = 10	Tow_{Weight} = 374.1	TTE = 1900	V_{inlet} = 0.6416
V_{outlet} = 22.92			

Figure 3. 3 Result Showing Power and Torque Requirements.

3.2.2 Recoil Force Calculations

To analyze the impact of fluid on robot movement, we need to calculate the recoil force. On the basis of momentum equation and considering the flow to be steady there will be recoil force equal to difference in magnitude of (mass flow * velocity) $_{out}$ - (mass flow * velocity) $_{in}$

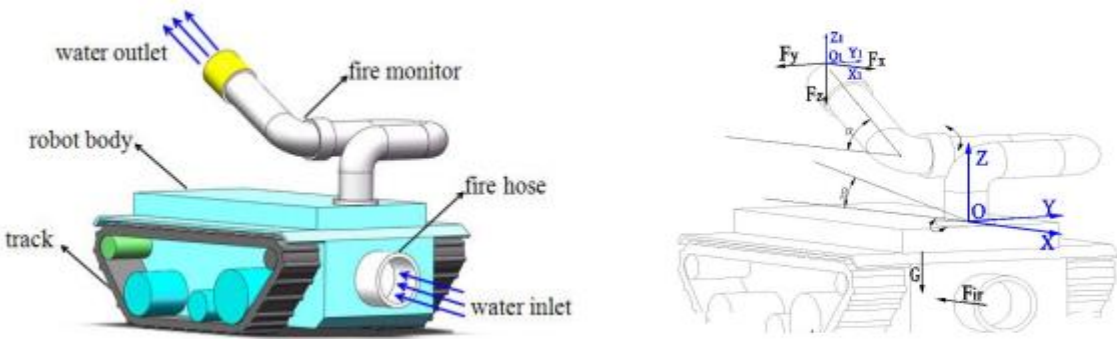

Figure 3. 4 Recoil Force Calculations for Robot.[3]

Considering $C.S.A_{inlet}$ and $C.S.A_{outlet}$ as inlet and outlet cross sectional areas where water enters and Q the flow rate and α , β be the angles between robot and monitor as shown in figure

$$C.S.A_inlet = 2 * pi * (0.063\text{^}2)/4$$

$$C.S.A_outlet = pi * (0.0335\ \text{^}2 - 0.030\text{^}2)\ /\ 4$$

$$Q = .24/60$$

$$V_inlet = Q\ /\ C.S.A_inlet$$

$$V_outlet = Q\ /\ C.S.A_outlet$$

$$F_X = C.S.A_{outlet} * V_{outlet}^2 * \cos\alpha * \cos\beta$$

$$F_y = C.S.A_{outlet} * V_{outlet}^2 * \cos\alpha * \sin\beta$$

$$F_z = C.S.A_{outlet} * V_{outlet}^2 * \sin\alpha$$

3.2.3 Battery Calculations

Considering we require robot to be working continuously for at least 30 min, it is to be noted that this calculation is only for movement as pressurization systems are not included in the power requirements. The BLDC motor selected for 1500 W is only available in 48 Volts. Power for running camera, controller, and fire monitor will also be needed from battery therefore.

$$P = V.I$$

$$1500 = 48 * I$$

$$I = 31\ Ah.$$

Battery with current capacity 31Ah is required for 1500 W motor at 48V. Considering other power requirements for camera, controller, fire monitor. As the batteries of voltages higher than 12 volts are not readily available in market, I decided to use 4* batteries of Current 60Ah and 12 V and connected in series for the required output at 48V

3.2.4 Suspension Selection and Calculations

The suspension system of a vehicle refers to the group of mechanical components that connect the wheels to the frame or body. Independent suspension system was chosen to keep the system less complex and less dynamic and easier in integration and calculations, as the robot is not very heavy and the system is required to have independent system the use of leaf spring type of suspension is not favorable. Coilovers with damping was a good choice as it was readily available in very small sizes in the market and in online market places unlike other Shocks, also in some mountain bike suspensions there is availability to change the spring size that helps in controlling the damping motion, compression and force.

Figure 3. 5 Different types of Dampers and suspensions.[11]

The suspension selected was more like the trailing arm suspension which consists of a steel arm whose one end is pivoted to the vehicle's chassis and the other end to the rear axle and a damper in our case it was a link. One damper was connected between one pair of parallel links in the middle with the help of connector. The angle made by links with the dampers needed to be near to 90º which would help maximum transfer of force axially in suspension and will help to prevent the damage to the dampers done if the force transfer is in transverse direction.

Considering the scenario that all the weight of the robot is equally distributed and during the time when there is an obstacle there would be requirement that the link must move to a certain predetermined and precalculated distance to provide proper damping to the robot.

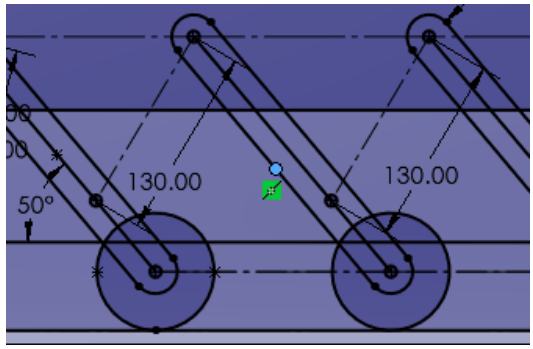

Figure 3. 6 Suspension Geometry and Angle with Links.

Now, as the angle between suspension and vertical is 30^0 assuming that during action suspension should move 25 mm vertically and after that it must act as a solid tube a simple estimation for stiffness can be done as shown.

$$Weight\ on\ one\ link\ (w) = m * g = \frac{300}{6} * 9.81 = 490.5$$

$$with\ some\ saftey\ (w) = 600\ N$$

$$h = 25\ mm$$

$$Compression\ of\ suspension\ requied\ (x) = \frac{h}{\sin 30}$$

$$600\ = k * x$$

$$k = \ 12\ \text{KN/m}$$

Eye to eye distance is our main concern as we require Eye to Eye distance equal to 130 mm and load bearing capacity of maximum 100 kg. In market many offroad bike and cycles dampers are available and we can easily get the required specification dampers as per the purchase department so this was a basic simple calculation for dampers and suspension setup.

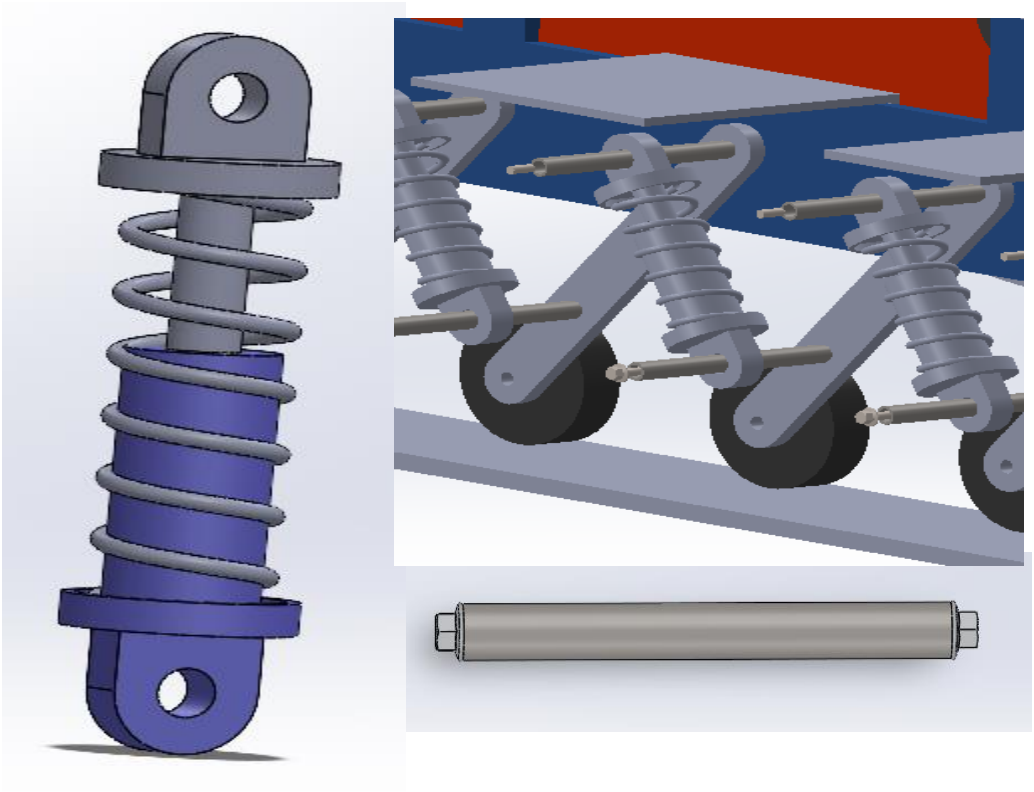

Figure 3. 7 Suspension Design with Eye-to-Eye distance 130mm and Connector.

3.3 Design and Finite Element Analysis

Designing the robot was the next step after understanding the basic role of different firefighting equipments and their shortcomings and understanding the basic components and completing the calculation for the robot I started to browse on internet trying to understand the process of fire fighting with help of robot and finalize the design process for the robot. Having calculated the approximate dimensions and capacity of motor and battery and taking into consideration the width of track and incorporating link, suspension setup the basic dimensions were clear to me in terms of height, width and length. The dimensions of robot were approximated to be in between 1200*850*550 – L*W*H respectively. The material was already specified to me by the company and they decided to go for the steel 304 sheets for the manufacturing as they were readily available in the factory.

Selection of frame structure was the main goal initially during the design as the complete robot would be standing and running on the frame structure. There were many frame structures available and designed to choose one among them, the design having fewer dynamic complexities and easy to manufacture was chosen among different conceptualized designs.

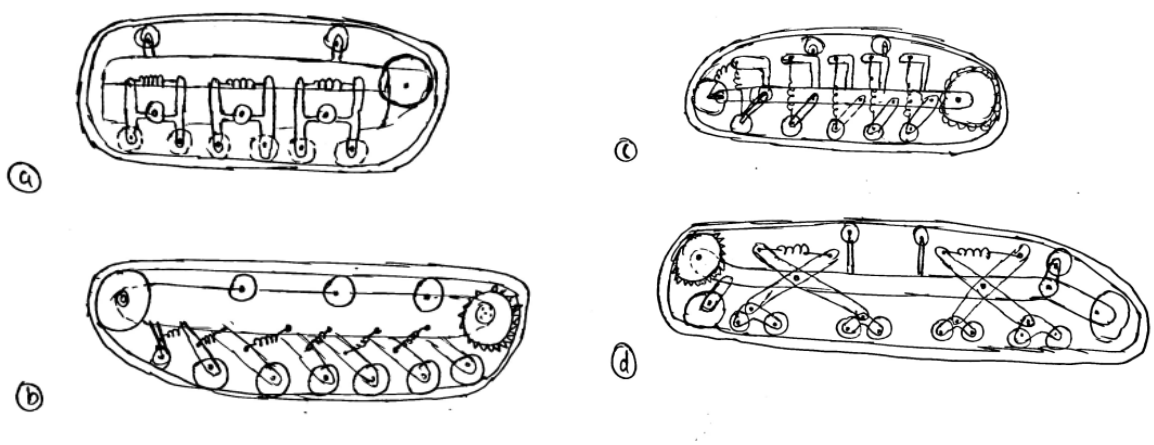

Figure 3. 8 Different Designs Consideration for Frame Structure.

As seen in above images there were many concepts available for the frame structure some were having interconnected suspension (a, d) and some were having requirement of more space and height for the structure as in case (c). I selected the simplest and less complex arrangement I found which was similar to case (b) type of arrangement. The material was steel 304 and initially the thickness of the plate and links was assumed to be **8 mm.**

Figure 3. 9 Design of Base Plate With 8mm Thickness.

The support wheels as seen in the image are to be made of rubber/ABS material. The load will be acting on these links due to suspensions when the robot would be moving.

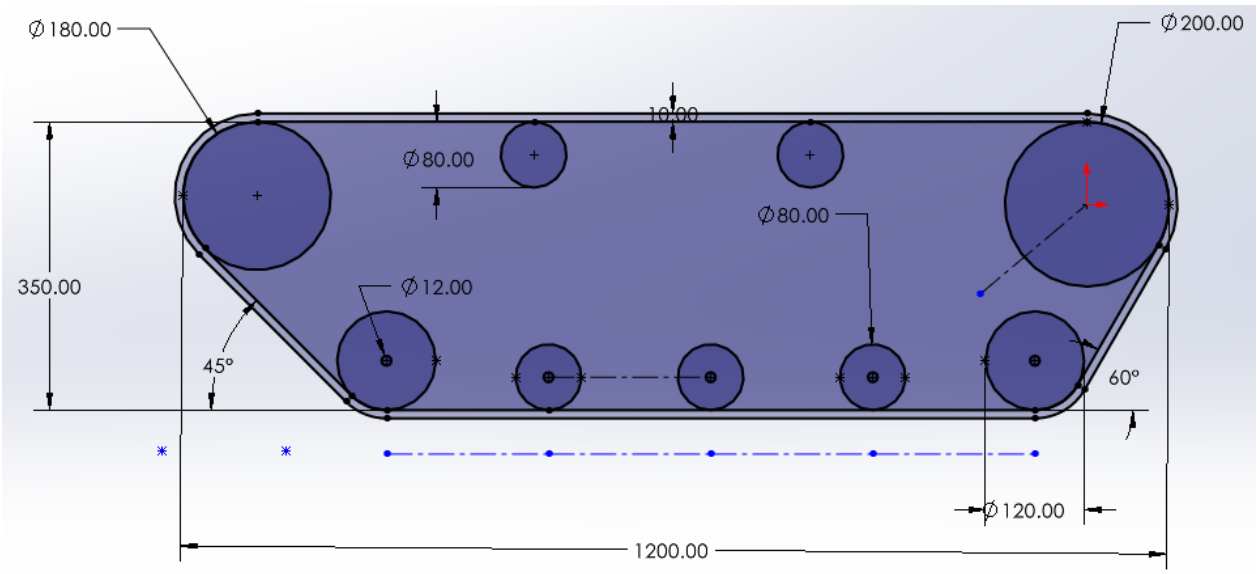

Figure 3. 10 Dimensions of Track, Shape and The Sizes of Support Wheels.

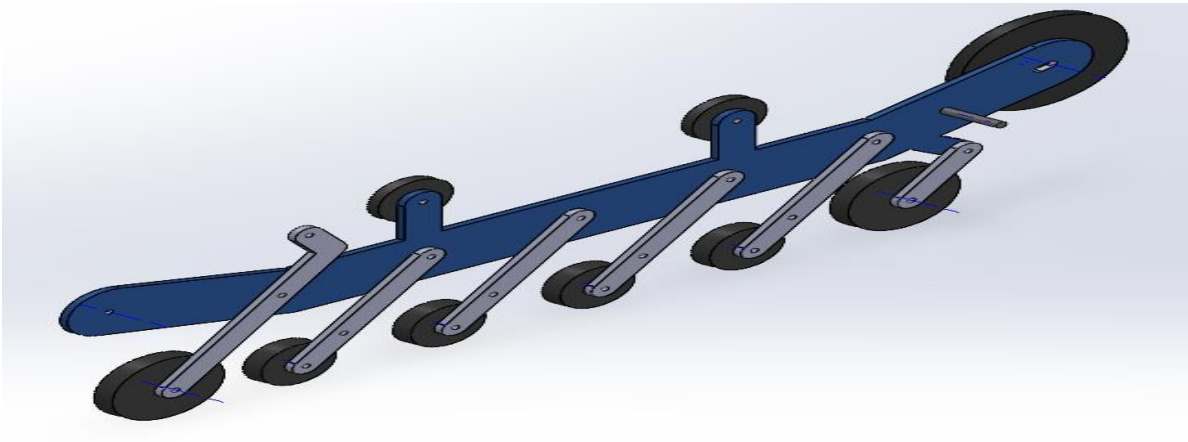

Figure 3. 11 Arrangement of Links with Frame.

Next design considerations were for connections and the width of track, width was chosen to be 180 mm with **10mm clearance** on both inside and outside on tracks so as to ensure that the track does not gets misaligned or slipped during operation of the robot for the connections also base plate which would be bearing all the loads of battery, monitor, and motors was designed and the CAD models of connecter of the monitor, battery, and motors were made and assembled to get the preliminary design of the robot.

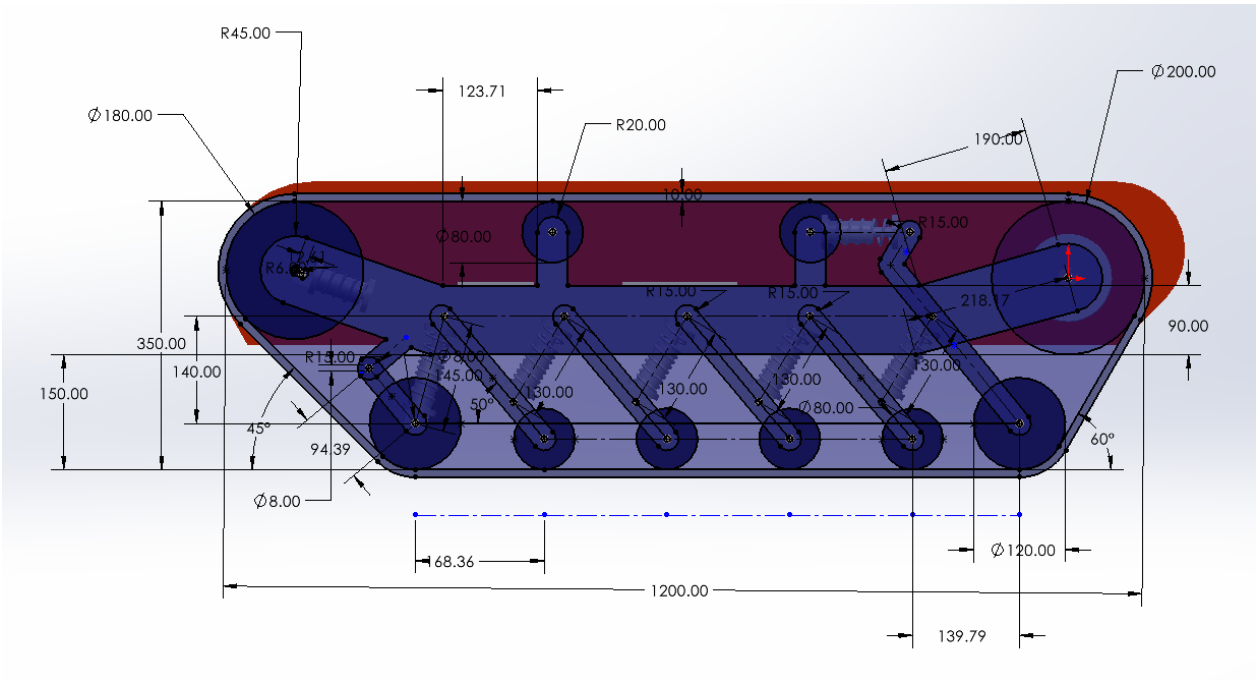

Figure 3. 12 Overall Dimensions and Preliminary Design of The Robot

Track system design required to select the type of track its length, width, pattern, pitch, etc. Track belt system is basically identified by parameters like width, pitch, guiding system used. Size is defined by width, pitch length, number of links.

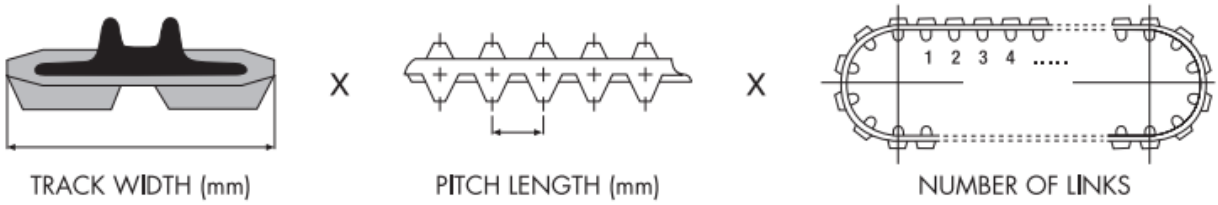

Figure 3. 13 Track Size Identification Parameters.[10]

The center-to-center distance of two consecutive guides is called the pitch. if sprocket skips the metal guides it is long pitch if sprocket moves through every metal guide it is called short pitched.

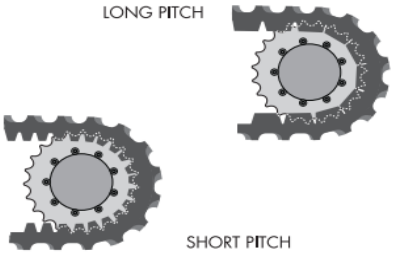

Figure 3. 14 Types of Pitch.[10]

The different types of tracks are available in market as shown above Non-Metal Core type of track was selected for our purpose, the different types are explained as below.

- **Conventional tracks:** These are used in undercarriages exclusively designed to operate with rubber tracks, rollers do not have contact with metal track except for guiding and alignment of track.
- **Interchangeable tracks:** They are same as conventional except they have more strength and are capable to change the type as steel or rubber by changing the links.
- **Non-Metal Core tracks:** They consist of a rubber compound and a heavy-duty inner cable they do not have metal core and have only metal guides which makes them less weighted. Thread and pattern on their surface help in increasing traction.

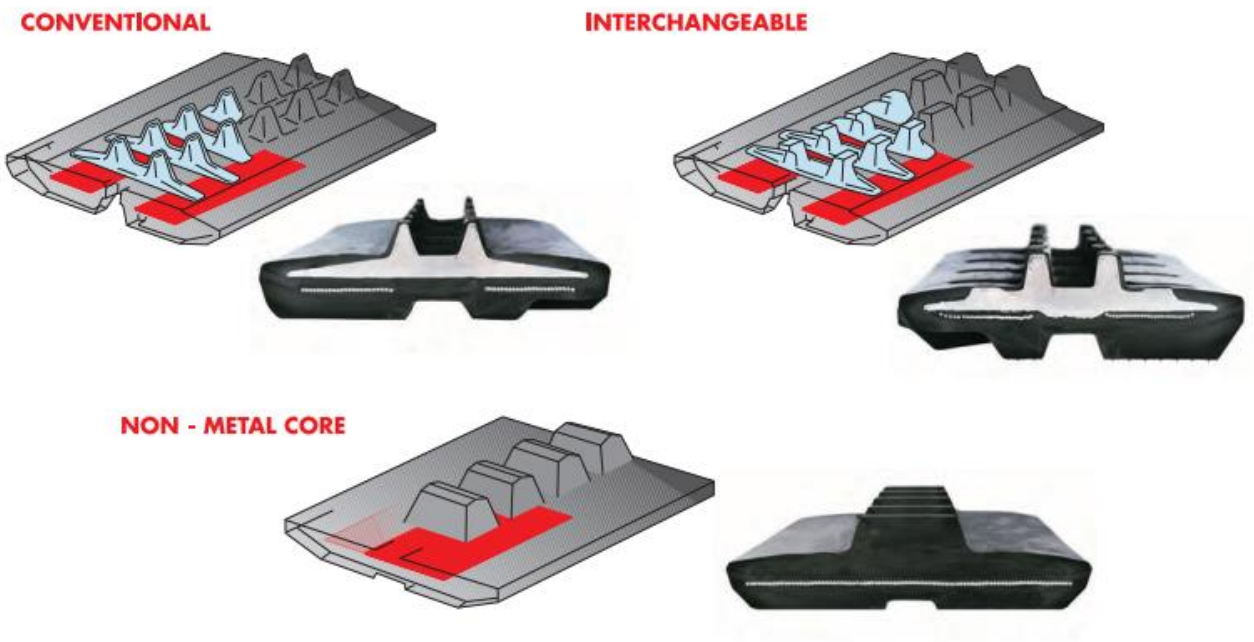

Figure 3. 15 Types of Track System. [10]

For our use non-metal core was the best option as it was having less weight, the application in our case is not very high end, the rubber will help in getting more traction.

3.3.1 Static structural analysis

CAE analysis of the designed plate and links was done with the parameters shown in the table and results were as below

Loading Conditions	
Material	Steel 304
Yield Strength (MPa)	206.8
Fixtures	Both ends of the links.
Loads	3000 N at hole connecting suspension to link.
Direction	Along the direction of alignment of suspension.
Results from the Static Structural Analysis	
Maximum Displacement (mm)	0.041
Maximum Von Mises Stress (MPa)	102.8
Factor of Safety	1.94

Table 3. 1 Loading Conditions and Result Table for FEA Simulation of Link.

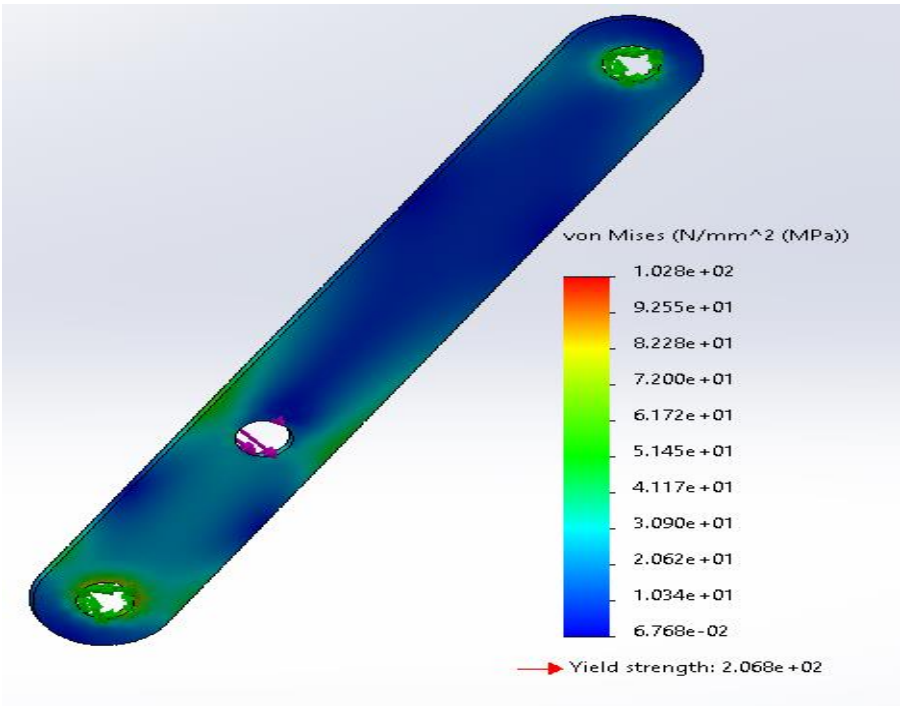

Figure 3. 16 Static Structural Analysis of 8mm Link.

For link the considering force of impact as the force due to suspension and considering the suspension as a solid rod without damping for worst case scenario assuming whole weight of robot as 300 kg and load acting on single link at an instant, we get the results as below

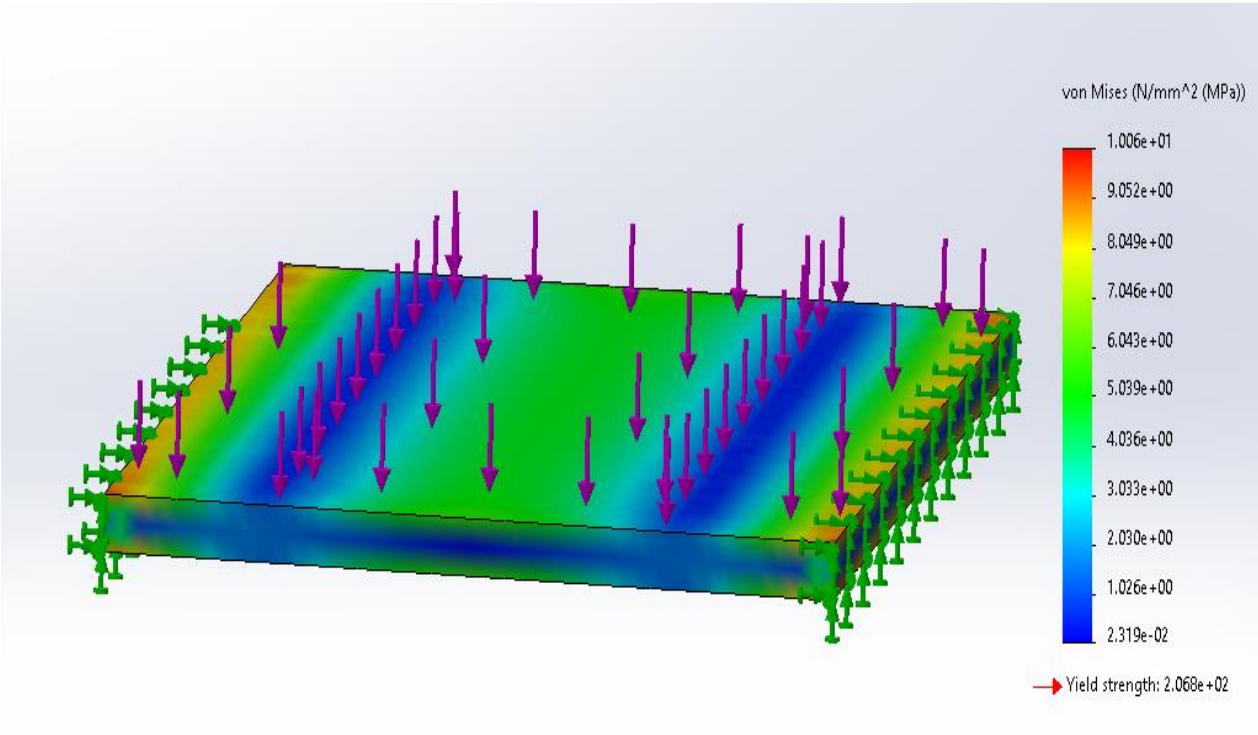

Figure 3. 17 Static Structural Analysis of Base Plate

Loading Conditions	
Material	Steel 304
Yield Strength (MPa)	206.8
Fixtures	All the edges along the plate connected to frame.
Loads	3000 N
Direction	Negative Y Direction.
Results from the Static Structural Analysis	
Maximum Displacement (mm)	0.0089
Maximum Von Mises Stress (MPa)	10.06
Factor of Safety	20

Table 3. 2 Loading Conditions and Result Table for FEA Simulation of Base Plate.

After doing the analysis for these two components it was clear that thickness required for the plates is much less than 8 mm so after doing some iterations and optimizing the overestimated load data

the final design was done with 3mm of steel plate for links and 5mm of plate for base plate. To ensure proper distribution of load along the Four support plates of the robot a new design of robot base plate was done which ensured proper connection and distribution of loads along the support structures.

New Static structural analysis was done with parameters and results were as below:

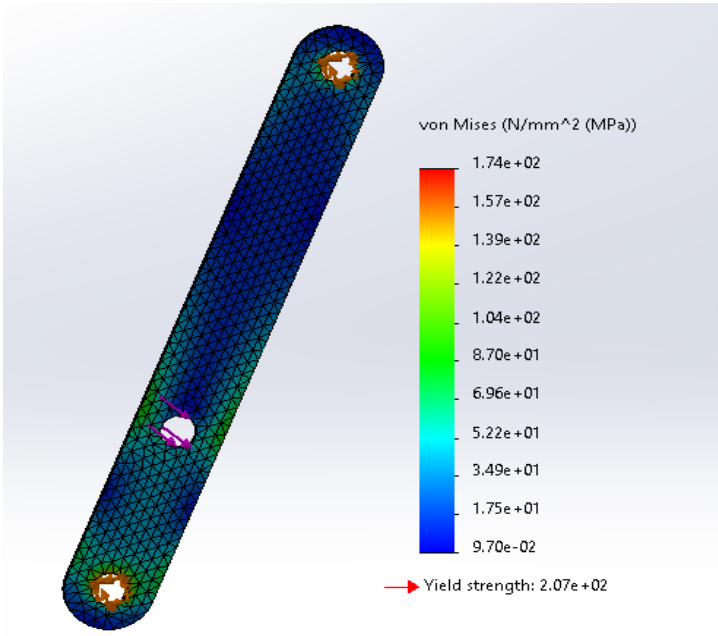

Figure 3. 18 Static Structural Analysis of New Link

Loading Conditions	
Material	Steel 304
Yield Strength (MPa)	206.8
Fixtures	Both ends of the links.
Loads	2000 N at hole connecting suspension to link.
Direction	Along the direction of alignment of suspension.
Results from the Static Structural Analysis	
Maximum Displacement (mm)	0.072
Maximum Von Mises Stress (MPa)	174.8
Factor of Safety	1.18

Table 3. 3 Loading Conditions and Result Table for FEA Simulation of New Link.

For the new plate force was now applied to the part where battery was placed by using the split face feature during application of force.

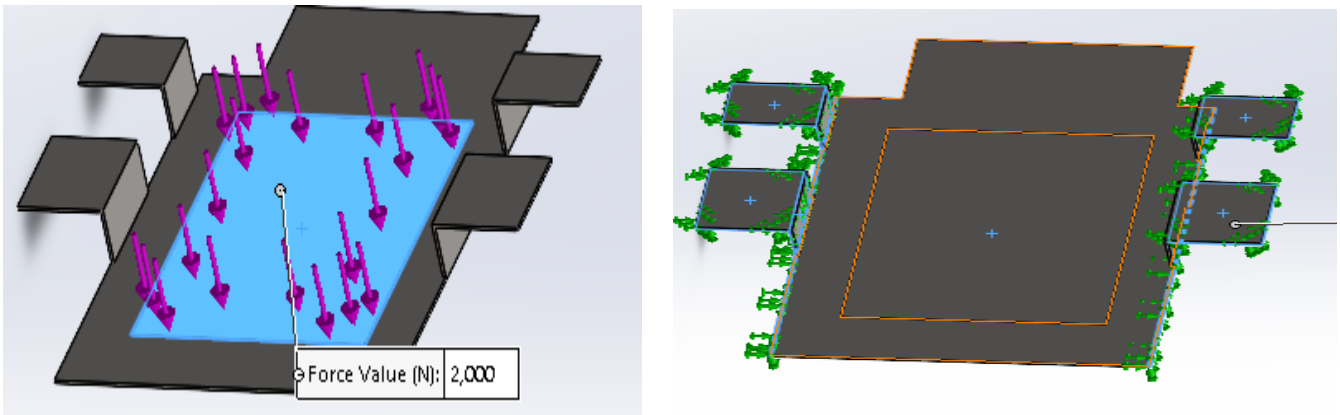

Figure 3. 19 Loading Condition and Fixtures for Base Plate with Help of Split Face.

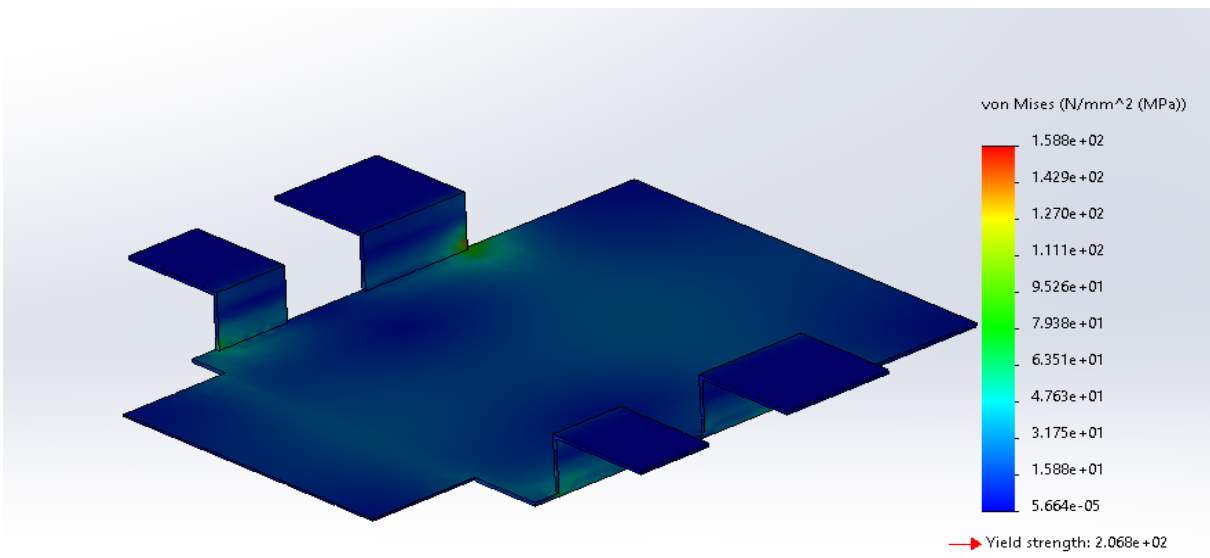

Figure 3. 20 Results of Static Structural Analysis of New Base Plate

Loading Conditions	
Material	Steel 304
Yield Strength (MPa)	206.8
Fixtures	All the edges along the plate connected to frame and faces that connects support frame.
Loads	2000 N
Direction	Negative Y Direction.
Results from the Static Structural Analysis	
Maximum Displacement (mm)	0.0089
Maximum Von Mises Stress (MPa)	46.7
Factor of Safety	4

Table 3. 4 Loading Conditions and Result Table for FEA Simulation of Link.

Body design was done considering that it would safeguard all the essential components of the of the robot from Dust, mist, and fire. On the upper port of body opening was provided to mount the monitor and, at the back, there was opening for Bis coupling for hose connection.

3.3.1 Some findings and Changes in Design.

Completing the initial design, I searched and visited Different vendors for the procurement of required parts. During this time, I found a vendor in Jaipur, Rajasthan who was having some requirements and order for the company where I visited there for sales purpose, I was able to see the developed product by the company and was able to learn many things from the design.

Findings:

- The plate thickness of the robot was comparable to our designed product and was around 3mm.
- Dimensions of H*W*L were also similar.
- The monitor they used was imported monitor and the inlet was extended in horizontally backward direction instead of downward direction, it was done so to reduce the backpressure and unbalanced forces acting on it.
- There was no connection from inside of robot for monitor it was extended directly backward.
- Track used was having embedded metal wires for the extra strength of track.
- There were no cameras in the robot which was a shortcoming.

Figure 3. 21 Manufacturing Stage of A Similar Robot

Figure 3. 22 Learnings from Similar Robot Indicating Different Monitor Design.

3.3.2 Changes in Design.

- Changes in body, new design of battery casing, motor casing was done and was validated using FEA simulation with proper loading conditions.

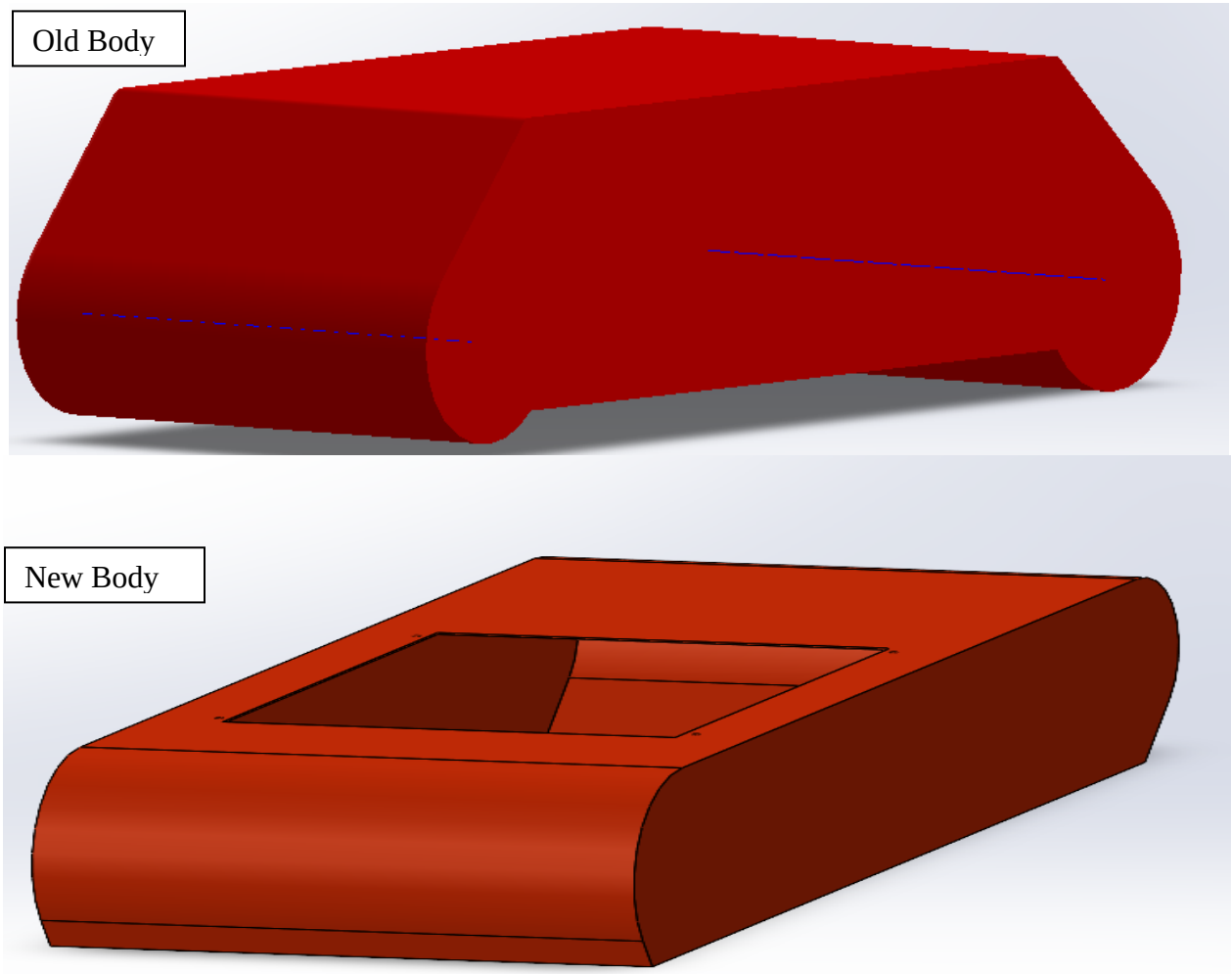

Figure 3. 23 Comparison of New And Old Body

- Above figure is showing the reduced height, less complex and new design of body having opening of battery casing on which the monitor would be mounted. In the new design the body is kept open as the battery casing will be having a plate 3mm thick with the mounting mechanism for the monitor which can be easily mounted on it.
- The overall new design of robot as compared to old design was having various changes, number of support wheels were increased to ensure that proper load distribution is there on the track system ensuring its safe operation, the width of base for new robot was less as

compared to old as the extra space and clearances required for the connection tube was now no longer needed and the monitor now can be directly mechanically mounted with the help of bolts on the plate of battery casing.

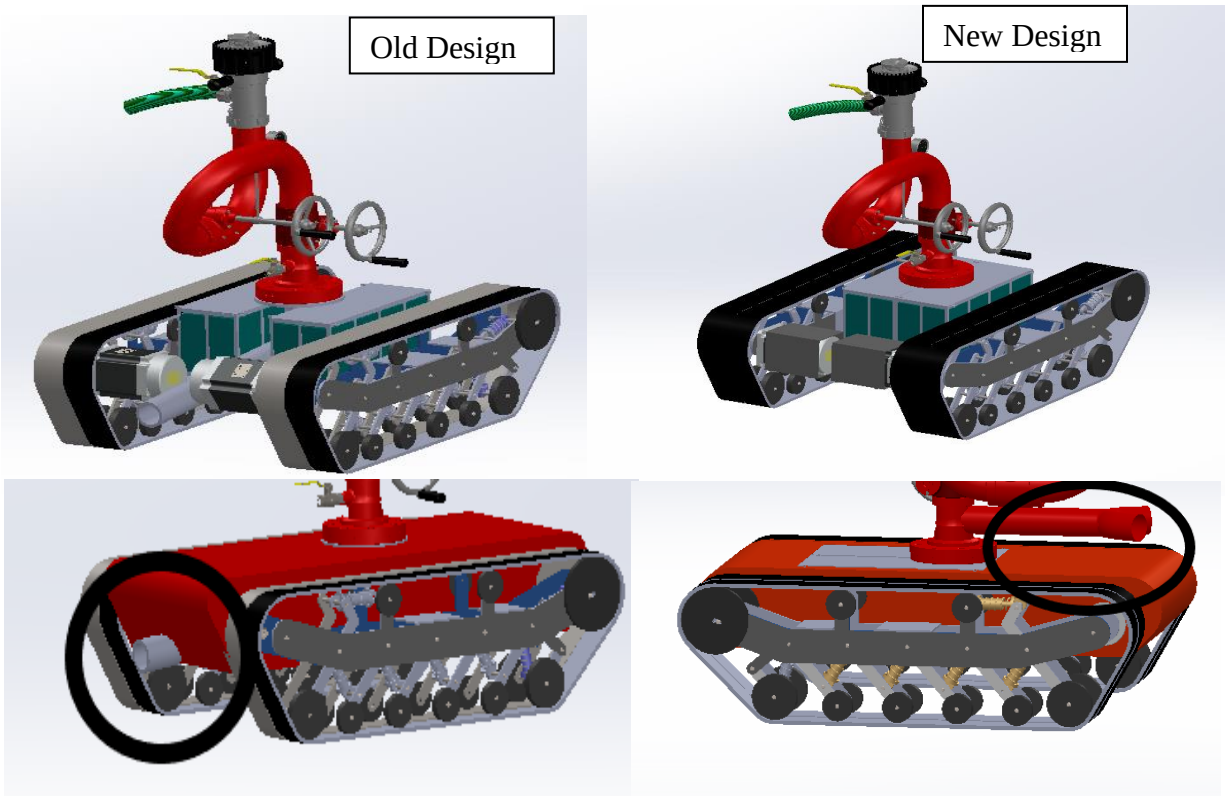

Figure 3. 24 Comparison of New and Old Design

- Motor casing design was kept very simple instead if attaching motor directly to the support plate the casing was designed to be welded to base plate, the two M6 bolts of length 25mm at the top of the casing were designed in such a way that they can be loosened or tightened in required amount so as to firmly hold the motor in its place.

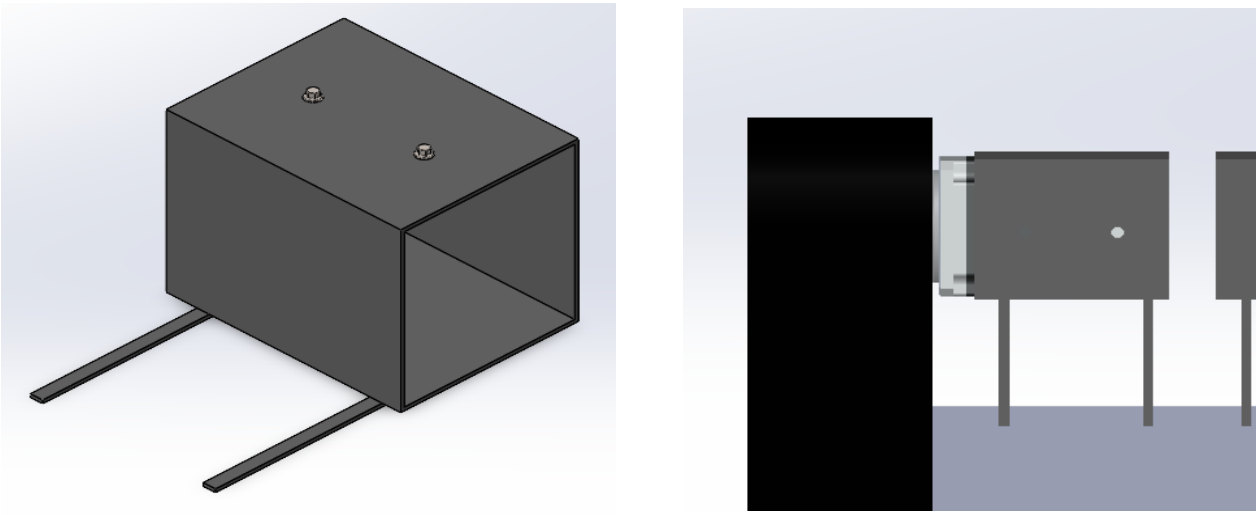

Figure 3. 25 Design and Arrangement of Motor Casing in Assembly.

- The above figure shows the comparison of new and old design with all the changes made the new battery casings are having design as below.

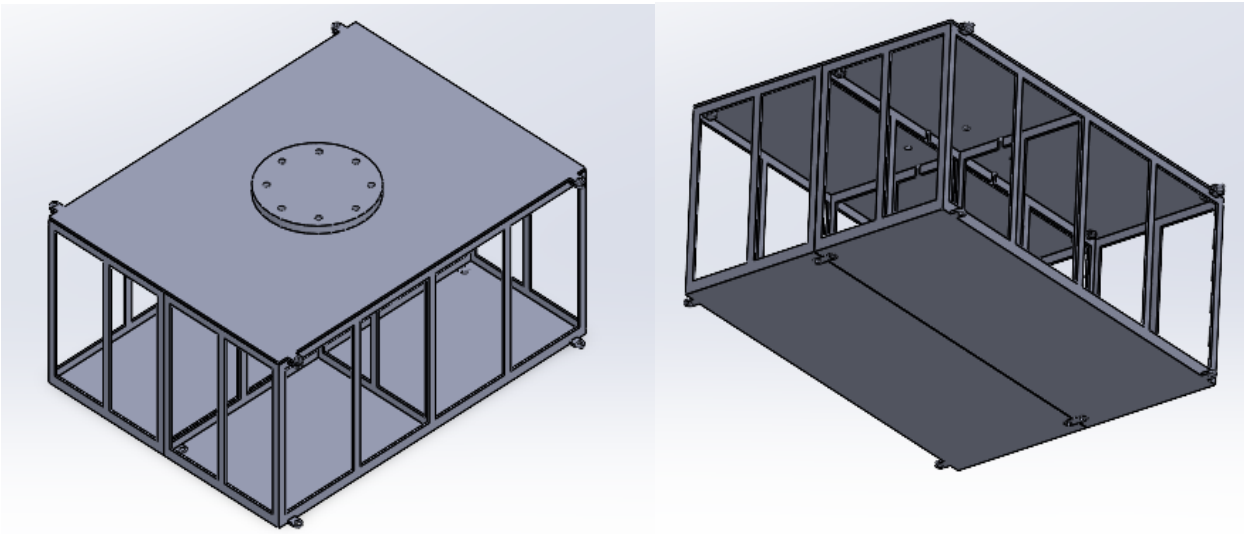

Figure 3. 26 Battery Casing Design with Provision of Mounting the Water Monitor.

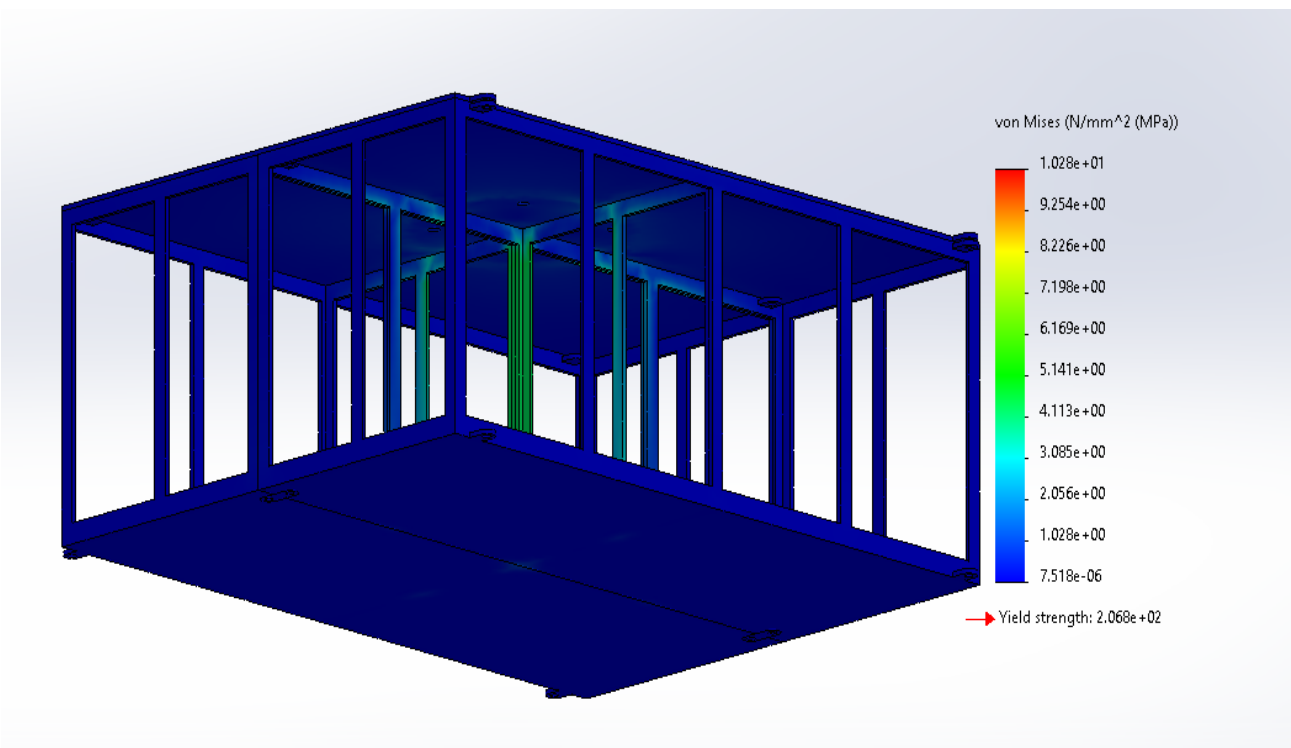

Figure 3. 27 Static Structural Analysis of Battery Casing.

Loading Conditions	
Material	Steel 304
Yield Strength (MPa)	206.8
Fixtures	Face at the base which will be connected to base plate.
Load 1	2000 N for 4 batteries at base
Load 2	700 N for weight of Monitor on the mounting area.
Direction	Negative Y Direction.
Results from the Static Structural Analysis	
Maximum Displacement (mm)	0.005
Maximum Von Mises Stress (MPa)	102.8
Factor of Safety	1.93

Table 3. 5 Loading Conditions and Result Table for FEA Simulation of Battery Casing.

- Track tensioner: One new finding was that when ever the robot would be moving the track will always have some slack and there would be possibility of misalignment of track, also in case of front impacts there was requirement of some shock absorber for tracks, track tensioner push the idler wheel forward to increase tension / reduce slack or droop also protect the robot from damage when contact a large solid object i.e., rocks, trees, deep holes, broken ground, stumps etc.

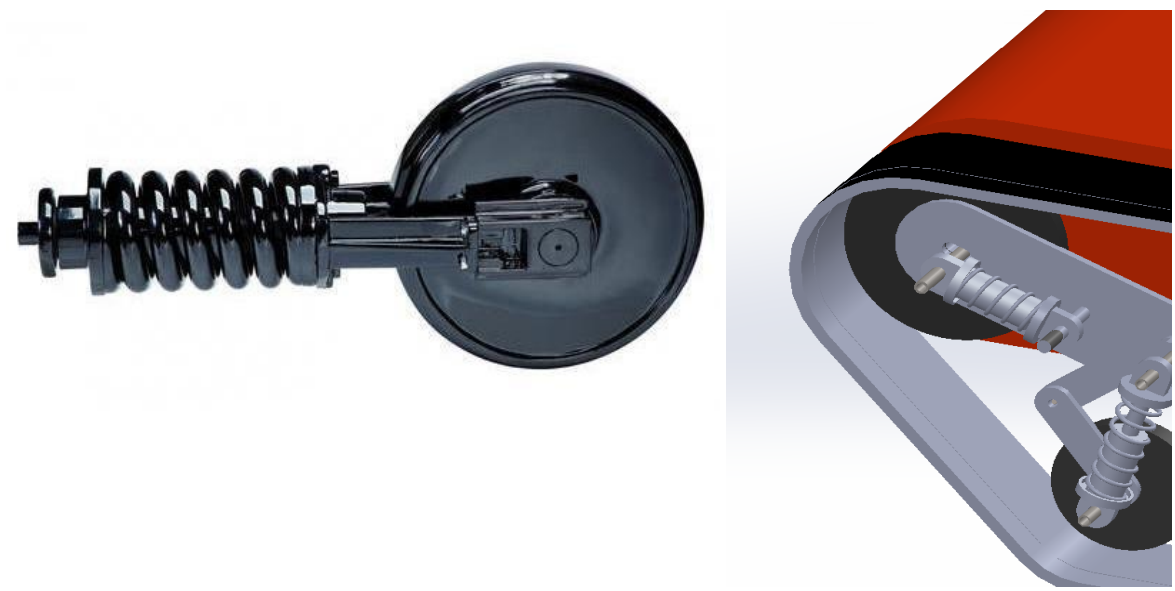

(a) *(b)*

Figure 3. 28 Track Tensioner Example (a)[11] and Incorporation in New Design(b).

- **The final design** with new inlet to monitor from outside and other changes is as below.

Figure 3. 29 Final Updated Design of Robot.

Final Specifications of Some Components	
Component	**Specification**
Motor	1500 W 100 Rpm
Battery	series connected 4 * 60Ah 12v battery.
Base Plate thickness	5mm AISI 304 Plate.
Links thickness	3mm AISI 304 Plate.
Body	2mm AISI 304 Plate.
Link connectors	12 mm diameter with M8 bolted connections.
Monitor	3-inch monitor, 1800 GPM flow rate.
Hose pipe	2*60 m type B hose pipe with coupling.
Controller range	100 m
Sprocket Diameter	200 mm
Track	Non-Metal Core Rubber track with metal wire support.

Table 3. 6 Specifications and Details of Components.

3.4 Challenges.

Starting from determining the power requirements, estimating weight and dimensions, understanding the various types of tracked vehicle mechanisms to deciding the frame structure and link positions, there was no proper research papers available on internet containing the standard mathematical derivations or explanations for design. Unviability of any custom manufactures of tracks in India it was very difficult to finalize the size and shape of the robot, the challenge was also there in setting up the track tensioner system required to keep the track always in position and tight ensuring proper transmission of power as no data was available about the stiffness of springs or dampers used in it.

After completing the final design, I was working with the other engineers towards design of new monitor with the minimum cost to company as the monitors are manufactured using casting there are pre designed dies of the components which the company has provided to the contractors who make the casting of different parts as per design, I met the vendor and worked with him to figure out the way in which we can manufacture the monitor inhouse without importing it from outside as the die and process were already there with the company only one die with extended inlet as required had to be made and integrated with old design to get the required design. I also searched the vendors for Track and Sprocket in Bharuch and Jaipur with the help of purchase department and plan was to try and make the track of require length, although as it requires first making of wire reinforcement and after that die casting of rubber on top of it to get the final product, cost estimation of one of the vendors was around 5 lakh per pair of track and such a high investment to develop a prototype was not feasible to company I was working on other alternatives for this solution for the rest of the time of my project. The making of controller and integrating it with all the controls in a single frame was one of the other challenges which I faced and required a lot of time to find a person who can help us do the PLC programming for the tasks take the order for single piece oof controller.

In future company wants to start the manufacturing and I will be assisting in the manufacturing phase after the completion of design project.

3.5 Learnings and Outcomes.

The Comprehensive Project was very helpful and insightful in understanding various concepts which were taught in course curriculum. I was able to relate many of the classroom learning to real life applications which I was seeing at industry premises. I learned out how an industry runs on daily basis what are different departments working in industry, including sales, account, maintenance, electrical, office staff. I also learned how sticking to deadlines is important in industry.

Training helped me to explore a totally new field of fire-fighting equipments like fire hose, fire hydrants, Foam equipment, monitors, trailer, pumps high expansion foam generator, etc. I learned about their uses how are they tested for various certifications and about the manufacturing processes involved in manufacturing of such components. Working on problem statement helped me to gain knowledge about the tracked vehicles which are not commonly seen on roads and are special purpose vehicles in some industries like fire-fighting and defense sector. I understood how the traction and power are associated with vehicle performance. Designing of robot made my knowledge of CAD design better and boosted my confidence on working with something completely new and without any specific knowledge about it. Working with FEA in assembly I learned various new concepts like defining the contact, gluing, bonding conditions between different parts of the assembly and also within parts, I learned a lot about the meshing and basics of FEA how the mesh size and simulation of actual scenario is important in the analysis and how it affects the results if not properly taken care of. I learned that how we must incorporate basic standard components in our design which are available in market and take care not to use any random dimensions, it also helped me understand that we must analyze the market first about what are the components/parts available in our local market according to our needs and if not we must look for the alternatives in international market and start procuring things in case it is urgent as the time for shipping thing internationally is very long which may delay our project.

In the end after many iterations in design I was able to present the final design to the company and the company accepted it and we would be in future working on manufacturing of the Robot.

4 References

4.1 Research papers & Journal Articles.

[1] Syed Talat Shabbir and Chen Hui-Van. “Design, Modeling and Virtual Validation of Mobility platform of Tracked Vehicle” ***Volume*** *95, the 3rd International Conference on Mechatronics and Mechanical Engineering (ICMME 2016). (*http://dx.doi.org/10.1051/matecconf/20179509007)

[2] Chin, S.K., Jomaas, G. & Sunderland, P.B. “Firefighter Nozzle Reaction.” *Fire Technology volume* -53, 1907–1917 (2017). (https://doi.org/10.1007/s10694-017-0661-3)

[3] Quin Zhang and Guangzhen Ke (2015) - “Kinematic Analysis of Fire—Fighting Robot Under the Impact of Waterflow Recoil Force” *International Conference of Mechatronics and Automation.*

[4] K. Altaf, A. Akbar and B. Ijaz (2007). "Design and Construction of an Autonomous Fire Fighting Robot," *International Conference on Information and Emerging Technologies, 2007*, doi: 10.1109/ICIET.2007.4381341.

[5] Vera, F., Rivera, R. & Núñez, C. (2015) Backward Reaction Force on a Fire Hose, Myth or Reality? *Fire Technol* **51,** 1023–1027 (2015). https://doi.org/10.1007/s10694-014-0430-5

[6] Abbas Eltigani (2012) – “Conceptual Design of a Rubber Tracked Mini- Vehicle for Small Holders Using Off-Road Vehicle Engineering Techniques”, *International Conference on Trends in Industrial and Mechanical Engineering (ICTIME'2012) Dubai, UAE.*

4.2 Books

[7] R.K Bansal (2010) *A Textbook of Fluid Mechanics and Hydraulic Machines* (Revised Ninth Edition) New Delhi, M/S Laxmi Publications Pvt. Ltd.

[8] V.B Bhandari (2010). *Design of machine elements*, New Delhi, Tata McGraw-Hill.

[9] Nitin S Gokhale & Sanjay S Deshpande (2008) *Practical Finite Element Analysis* (1st ed), Maharashtra, Fine to Infinite Publications.

4.3 Websites & Online Articles.

[10] *ITR product catalogue*, Retrieved from, https://fliphtml5.com/tngxn/poso/basic

[11*] Tensioner for Track and Suspension,* Retrieved from online market place website India mart, https://www.indiamart.com/proddetail/excavator-track-adjuster-14967395673.html

[12] *Company and Product Details*, from company website Retrieved from, https://aaagindia.in\

[13] *Details of tracks and the different types of tracks*, Retrieved from website of Bridgestone industrial, https://www.bridgestoneindustrial.eu/products/rubber-tracks/

[14] *Details of tracks*, Retrieved from website of excavator rubber tracks, http://www.excavator-rubbertracks.com/sale-11550408-43kg-tracked-robot-chassis-dp-bgm-100-engineering-machinery-miniature-rubber-tracks.html

[15] *Some references for types of frame design*, retrieved from online marketplace Alibaba website https://www.alibaba.com/product-detail/cheap-rubber-tracks-large-tracked-vehicle_62015083436.html

[16] Lynne Peskoe-Yang (2009, April 27). Colossus the robot assists the Paris Fire Brigade in fighting a fire at Notre Dame Cathedral. Retrieved from, https://spectrum.ieee.org/colossus-the-firefighting-robot-that-helped-save-notre-dame

[17] How to Calculate Nozzle Reaction, Retrieved from website of united states department of agriculture and forest service. https://www.fs.fed.us/eng/pubs/html/02511318/02511318.htm

❖ **Personal Details**

Name of the Student:	Shubham Satishbhai Patel.
Permanent Address:	Opposite Radha Krishna temple, Station Road Nandej Barejadi, Ahmedabad, Gujarat (382435).
Email:	Shubam.pmc18@sot.pdpu.ac.in
Mobile no.:	+91 9624069783